A Technical Manual from the experts in *Business-Critical Continuity*™

NetSure™ -48V DC Power System

User Instructions, UM582127000 (Issue AC, January 2, 2013)

Specification Number: 582127000
Model Number: 721NPBB

EMERSON™
Network Power

This page is intentionally blank.

TABLE OF CONTENTS

CONTENTS **PAGE**

IMPORTANT SAFETY INSTRUCTIONS

GENERAL SAFETY

Danger: YOU MUST FOLLOW APPROVED SAFETY PROCEDURES.

Performing the following procedures may expose you to hazards. These procedures should be performed by qualified technicians familiar with the hazards associated with this type of equipment. These hazards may include shock, energy, and/or burns. To avoid these hazards:

a) The tasks should be performed in the order indicated.

b) Remove watches, rings, and other metal objects.

c) Prior to contacting any uninsulated surface or termination, use a voltmeter to verify that no voltage or the expected voltage is present.

d) Wear eye protection, and use recommended tools.

e) Use double insulated tools appropriately rated for the work to be performed.

Caution: Performing maintenance and/or troubleshooting procedures may interrupt power to the loads, if battery reserve is not sufficient.

VOLTAGES

AC Input Voltages

Danger: This system operates from AC voltage capable of producing fatal electrical shock. AC input power must be completely disconnected from the branch circuits wiring used to provide power to the system before any AC electrical connections are made. DO NOT apply AC power to the system until all electrical connections have been completed and checked.

DC Input/Output Voltages

Danger: This system produces DC Power and may require battery to be connected to it. Although the DC voltage is not hazardously high, the rectifiers and/or battery can deliver large amounts of current. Exercise extreme caution not to inadvertently contact or have any tool inadvertently contact a battery terminal or exposed wire connected to a battery terminal. NEVER allow a metal object, such as a tool, to contact more than one termination or battery terminal at a time, or to simultaneously contact a termination or battery terminal and a grounded object. Even a momentary short circuit can cause sparking, explosion, and injury.

BATTERY

Danger: Correct polarity must be observed when connecting battery leads.

Danger: Special safety precautions are required for procedures involving handling, installing, and servicing batteries. Observe all battery safety precautions in this manual and in the battery instruction manual. These precautions should be followed implicitly at all times. Remove watches, rings, and other metal objects before connecting battery leads.

CIRCUIT CARD HANDLING

Warning: ***Installation or removal of the circuit cards requires careful handling. Before handling any circuit card, read and follow the instructions contained on the Static Warning Page.***

STATIC WARNING

The printed circuit cards used in this equipment contain static sensitive components. The warnings listed below must be observed to prevent damage to these components. Disregarding any of these warnings may result in personal injury or damage to the equipment.

1. Strictly adhere to the procedures provided in this document.
2. Before touching any static sensitive component or printed circuit card containing such a component, discharge all static electricity from yourself by wearing a wrist strap grounded through a one megohm resistor. Some wrist straps, such as Emerson Network Power Part Number 631810600, have a built-in one megohm resistor; no external resistor is necessary. Read and follow wrist strap manufacturer's instructions outlining use of a specific wrist strap.
3. Do not touch the traces or components on a printed circuit card containing static sensitive components. Handle the printed circuit card only by the edges that do not have connector pads.
4. After removing a printed circuit card containing a static sensitive component, place the printed circuit card only on conductive or anti-static material such as conductive foam, conductive plastic, or aluminum foil. Do not use ordinary Styrofoam or ordinary plastic.
5. Store and ship static sensitive devices or printed circuit cards containing such components only in static shielding containers.
6. If necessary to repair a printed circuit card containing a static sensitive component, wear an appropriately grounded wrist strap, work on a conductive surface, use a grounded soldering iron, and use grounded test equipment.

This Page Left Intentionally Blank

CHAPTER 1.
SYSTEM OVERVIEW

CUSTOMER DOCUMENTATION PACKAGE

This document (UM582127000) provides *User Instructions* for NetSure™ Power System Model **721NPBB**, Spec. No. **582127000**.

The complete Customer Documentation Package consists of…

Bound System Installation Manual	
• Power System Installation Instructions:	IM582127000
• Power System Quick Start Guide:	QS582127000
Bound ACU+ Controller User Manual	
• ACU+ Controller User Instructions:	UM1M820BNA (includes instructions for 1M820DNA Controller)
USB Drive with All Customer Documentation	
• Power System Installation Instructions:	IM582127000
• Power System Quick Start Guide:	QS582127000
• Power System User Instructions:	UM582127000
• Power System "System Application Guide":	SAG582127000
• Rectifier Module Mounting Shelf Power Data Sheet:	PD588705000
• Rectifier Instructions:	UM1R483500E
• Rectifier/Converter Module Mounting Shelf Power Data Sheet:	PD588705300
• Rectifier Instructions:	UM1R482000E3
• Converter Instructions:	UM1C48241500

- Engineering Drawings
- Also provided on the USB drive is an ACU+ configuration drawing and the ACU+ configuration files loaded into the ACU+ as shipped.

SYSTEM DESCRIPTION

<u>-48V DC @ up to 4000 Amperes Power System</u>

The NetSure™ 721NPBB DC Power System is a complete integrated power system containing rectifiers, optional converters, intelligent control, metering, monitoring, and distribution.

This power system is designed to power a load while charging a positive grounded battery. This power system is capable of operating in a batteryless installation or off battery for maintenance purposes. The power system is designed for operation with the positive output grounded.

This system consists of the following components.

- **Distribution Cabinet**

  The system always includes a minimum of one distribution cabinet, which provides DC distribution through fuses and/or circuit breakers. The distribution cabinet is factory mounted in the relay rack or shipping brackets specified when ordered.

  Four different sizes of distribution cabinets are available to accept from one (1) to four (4) distribution panels. A variety of distribution panels are available that provide load distribution, battery distribution, and dual voltage load distribution for use with +24V converters. These distribution panels are configured to accept either bullet nose type circuit breakers and TPS/TLS fuseholders, TPH fuses, TPL-B fuses, or GJ/218 circuit breakers.

  The distribution cabinet may be equipped with low voltage load disconnect (LVLD), low voltage battery disconnect (LVBD), and manual battery disconnect.

- **ACU+ (Advanced Control Unit Plus) Controller**

  The system contains one controller. The controller provides power system control (including optional low voltage battery disconnect (LVBD) and low voltage load disconnect (LVLD) control), rectifier control (including a charge control function), converter control, metering functions, monitoring functions, and local/remote alarm functions. The controller also supports rectifier temperature compensation if the system is equipped with a temperature probe(s). Temperature probe(s) may also be designated to monitor ambient temperature and/or battery temperature. The controller also provides data acquisition, system alarm management, and advanced battery and energy management. The controller contains an LCD display and keypad for local access. The controller provides Ethernet connection and supports software upgrade via its USB port. It also comes with a comprehensive web page and SNMP capability for remote system management. Refer to the ACU+ Controller Instructions (UM1M820BNA) for more information.

- **Rectifier Module Mounting Shelf (Spec. No. 588705000)**

  The system may contain one or more Spec. No. 588705000 rectifier module mounting shelves, each of which houses up to six (6) rectifier modules. Refer to Power Data Sheet PD588705000 for more information.

  - **Rectifier Modules (for use in Spec. No. 588705000)**

    The system contains rectifier modules, which provide load power, battery float current, and battery recharge current during normal operating conditions. Refer to the Rectifier Instructions (UM1R483500E) for more information.

- **Rectifier/Converter Module Mounting Shelf (Spec. No. 588705300)**

  The system may contain one or more Spec. No. 588705300 rectifier/converter module mounting shelves, each of which houses rectifier modules and optional DC-DC converter modules. Refer to Power Data Sheet PD588705300 for more information.

  - **Rectifier Modules (for use in Spec. No. 588705300)**

    The system contains rectifier modules, which provide load power, battery float current, and battery recharge current during normal operating conditions. Refer to the Rectifier Instructions (UM1R482000E3) for more information.

- **Optional DC-DC Converter Modules (for use in Spec. No. 588705300)**

  Where +24V DC load power is also required, DC-DC converter modules are available. Refer to the Converter Instructions (UM1C48241500) for more information.

CHAPTER 2.
OPERATING PROCEDURES

CONTROLLER, RECTIFIERS, AND OPTIONAL CONVERTERS

For operation instructions on these units, refer to the following documents.

- ACU+ Controller Instructions (UM1M820BNA)
- Rectifier Instructions (UM1R483500E or UM1R482000E3)
- Converter Instructions (UM1C48241500)

ESTOP FUNCTION

If an ESTOP switch is wired to the ACU+ IB2 Interface Board, customer-furnished system ground applied to terminal DI8+ activates the ESTOP function. The ESTOP function shuts down and locks out the rectifiers, opens the LVD's, and shuts down the converters. When the ESTOP signal is removed, LVD's close (if battery present) and converters restart. To restart the rectifiers; turn AC power to the rectifiers OFF, wait 30 seconds or more (until the LEDs on the rectifier extinguish), then turn AC power to the rectifiers ON. Rectifiers can also be restarted from the ACU+ LCD or WEB Interface menu (via the Rectifier Reset command, found in the Manual menu in the LCD menus or under the Rectifier Control Tab in the WEB Interface).

ACU+ BATTERY CHARGE CURRENT LIMIT FEATURE

Functionality: After a commercial AC failure or when some battery cells are permanently damaged, the current to the batteries can be quite extensive. To avoid overheating or further damages to the battery, the ACU+ can be programmed to limit the battery current to a preset level by limiting the charging voltage of the rectifiers. Should the battery current still exceed a higher preset value, an alarm is issued.

In this system, the ACU+ Battery Charge Current Limit feature is set to be disabled. Refer to the ACU+ Controller Instructions (UM1M820BNA) to enable and program this feature, if desired. If enabled, battery charge current is limited to the value set in the ACU+ Controller, as long as battery voltage is above 47VDC.

LOCAL CONTROLS AND INDICATORS

Refer to the Controller, Rectifier, and Converter Instructions for descriptions of the local controls and indicators located on these units.

Refer to this section for descriptions of the local controls and indicators located on the circuit cards installed inside the distribution cabinet.

Circuit Card Locations

Refer to Figure 2-1.

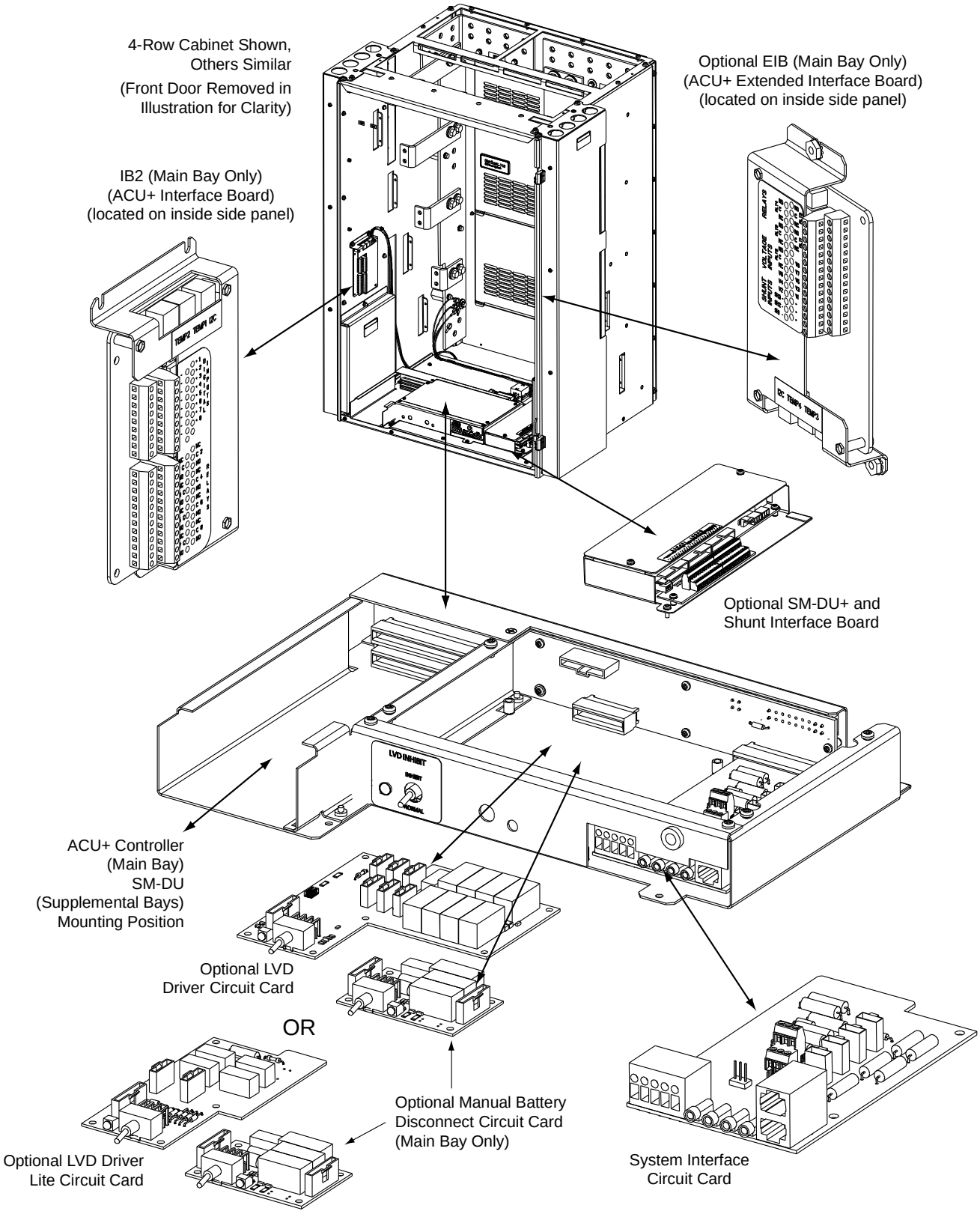

Figure 2-1
Circuit Card Locations

System Interface Circuit Card

The system interface circuit card contains test points to externally monitor bay voltage and bay load. Refer to Figure 2-2.

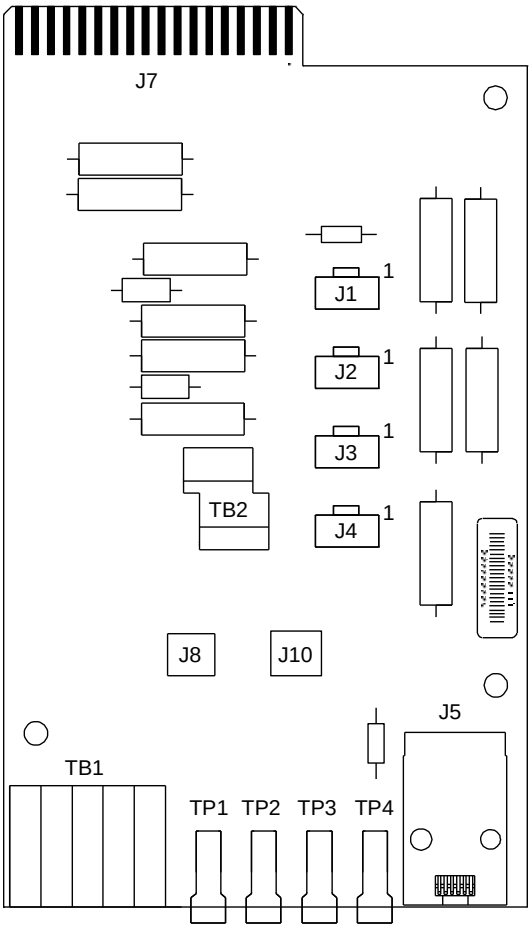

TP1 (+) and TP2 (-) Bay Voltage Monitoring

TP3 (+) and TP4 (-) Bay Load Shunt Monitoring

<u>Bay Load Shunt Scale</u>

List 21, 1-Row Cabinet
800A / 25mV
32A per mV

List 22, 2-Row Cabinet
2000A / 25mV
80A per mV

List 23, 3-Row Cabinet
2500A / 25mV
100A per mV

List 24, 4-Row Cabinet
2500A / 25mV
100A per mV

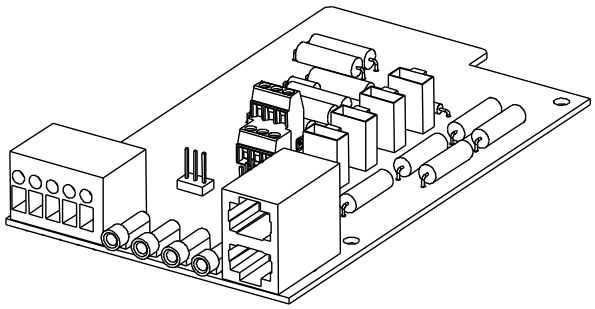

Figure 2-2
System Interface Circuit Card

Optional LVD Driver Circuit Card

The optional LVD driver circuit card installed in the main bay contains an LVD inhibit switch and indicator. Refer to Figure 2-3. LVD driver circuit cards are required for 2-, 3-, or 4-row distribution cabinets that contain three or more LVD contactors (LVBD and/or LVLD); or if the distribution cabinet is equipped with an LVBD contactor rated 1200A or higher.

Caution: If the switch is returned to the ON (normal) position when low voltage disconnect alarms are active, a low voltage disconnection will occur.

Warning: While the LVD inhibit switch is in the OFF (inhibit) position, a low voltage disconnection will not occur if battery or load voltage decreases below the low voltage disconnect setpoint. For maximum battery protection, this switch should <u>NOT</u> be left in the OFF (inhibit) position.

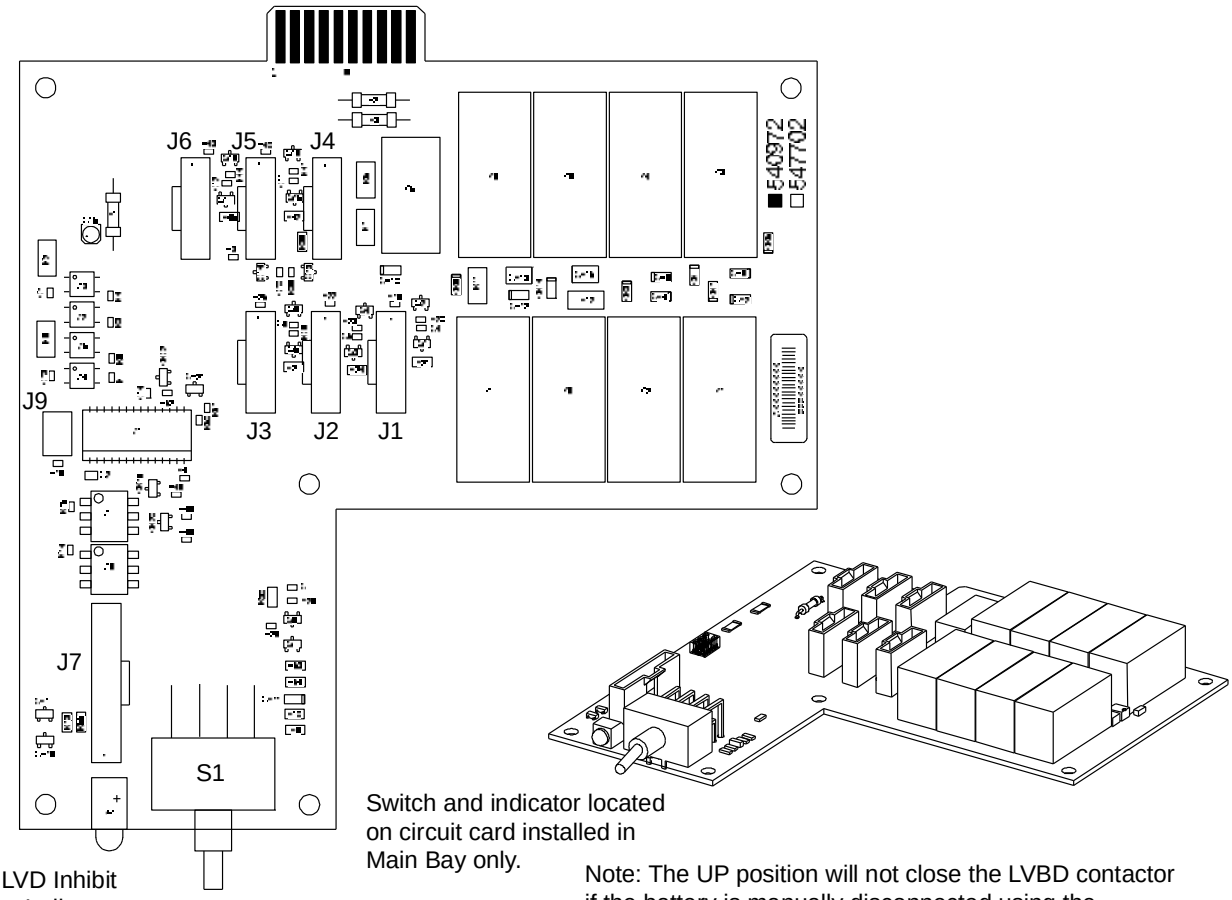

Switch and indicator located on circuit card installed in Main Bay only.

Note: The UP position will not close the LVBD contactor if the battery is manually disconnected using the Manual Battery Disconnect Switch.

LVD Inhibit Active Indicator

Illuminates when the low voltage disconnect circuit has been disabled through the use of the LVD Inhibit switch.

LVD Inhibit Switch

<u>Momentary UP / Middle / Down</u>
Momentary UP Position: Closes all LVD Contactors (inhibit mode).
Middle Position: OFF (ACU+ DOES NOT control LVD's) (inhibit mode).
DOWN Position: ON (ACU+ controls LVD's).

Figure 2-3
Optional LVD Driver Circuit Card

Optional LVD Driver Lite Circuit Card

The optional LVD driver lite circuit card installed in the main bay contains an LVD inhibit switch and indicator. Refer to Figure 2-4. LVD driver lite circuit cards are required for distribution cabinets that contain two LVLD contactors or one LVLD contactor and one LVBD contactor. LVBD contactor must be rated at 600A or lower.

Caution: ***If the switch is returned to the ON (normal) position when low voltage disconnect alarms are active, a low voltage disconnection will occur.***

Warning: ***While the LVD inhibit switch is in the OFF (inhibit) position, a low voltage disconnection will not occur if battery or load voltage decreases below the low voltage disconnect setpoint. For maximum battery protection, this switch should <u>NOT</u> be left in the OFF (inhibit) position.***

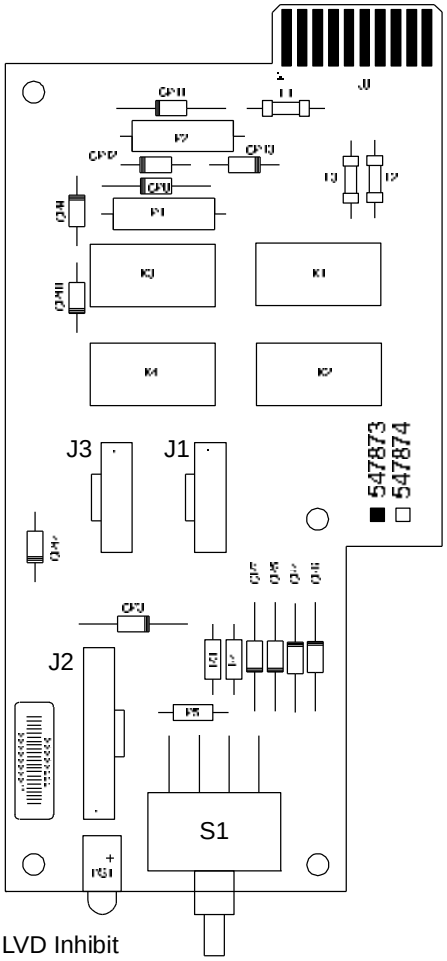

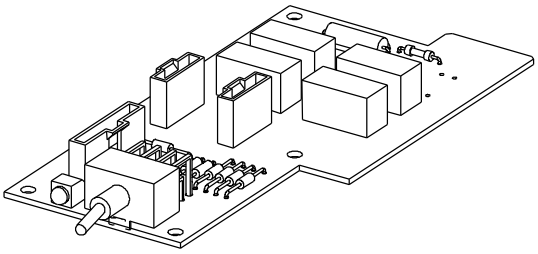

Switch and indicator located on circuit card installed in Main Bay only.

Note: The UP position will not close the LVBD contactor if the battery is manually disconnected using the Manual Battery Disconnect Switch.

LVD Inhibit Active Indicator

Illuminates when the low voltage disconnect circuit has been disabled through the use of the LVD Inhibit switch.

LVD Inhibit Switch

<u>Momentary UP / Middle / Down</u>
Momentary UP Position: Closes all LVD Contactors (inhibit mode).
Middle Position: OFF (ACU+ DOES NOT control LVD's) (inhibit mode).
DOWN Position: ON (ACU+ controls LVD's).

Figure 2-4
Optional LVD Driver Lite Circuit Card

Optional Manual Battery Disconnect Circuit Card (Main Bay Only)

The optional manual battery disconnect circuit card contains a manual battery disconnect switch and indicator. Refer to Figure 2-5.

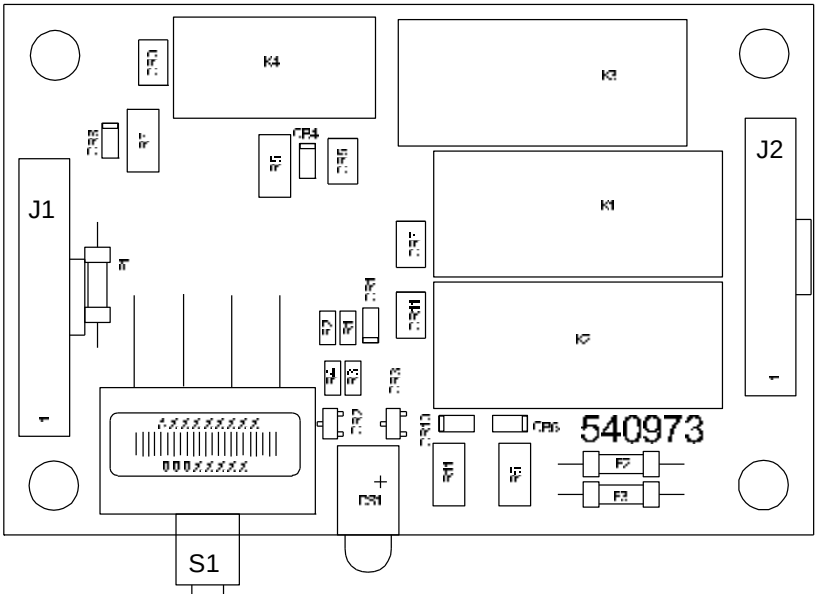

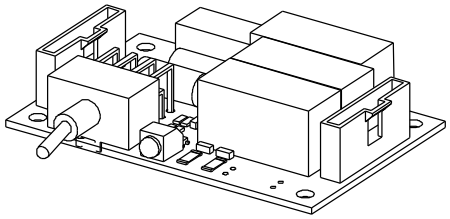

Manual Battery Disconnect Switch

Manual Battery Disconnect Active Indicator

Illuminates if the Battery Disconnect Contactor has been manually disconnected (placed in open position).

<u>Momentary UP / Middle / Momentary Down</u>

Momentary UP Position: Closes (latches in close position) the Battery Disconnect Contactor.
Middle Position: Normal Operation.
Momentary DOWN Position: Opens (latches in open position) the Battery Disconnect Contactor. Momentarily place switch in the UP position to close the contactor.

Figure 2-5
Optional Manual Battery Disconnect Circuit Card (Main Bay Only)

SM-DU Circuit Card

The SM-DU is used in supplemental bays in place of ACU+ controller. The SM-DU monitors the bay and reports to the controller. The controller sends commands to the SM-DU to fulfill battery management and load control functions according to the received data.

There are three (3) status and alarm indicators located on the SM-DU. The functions of these indicators (from top to bottom as shown in the illustration) are as shown in Table 2-1. Refer to Figure 2-6 for location.

Indicator	Normal State	Fault State	Fault Cause
Alarm (Red)	Off	On	A critical or major alarm.
Alarm (Yellow)	Off	On	A minor alarm.
Operation (Green)	On	Off	SM-DU is non-operational.
		Flashing	A 1/3Hz flashing indicates the SM-DU is being identified by the Controller. A 1Hz flashing indicates a communication failure.

Table 2-1
SM-DU Indicators

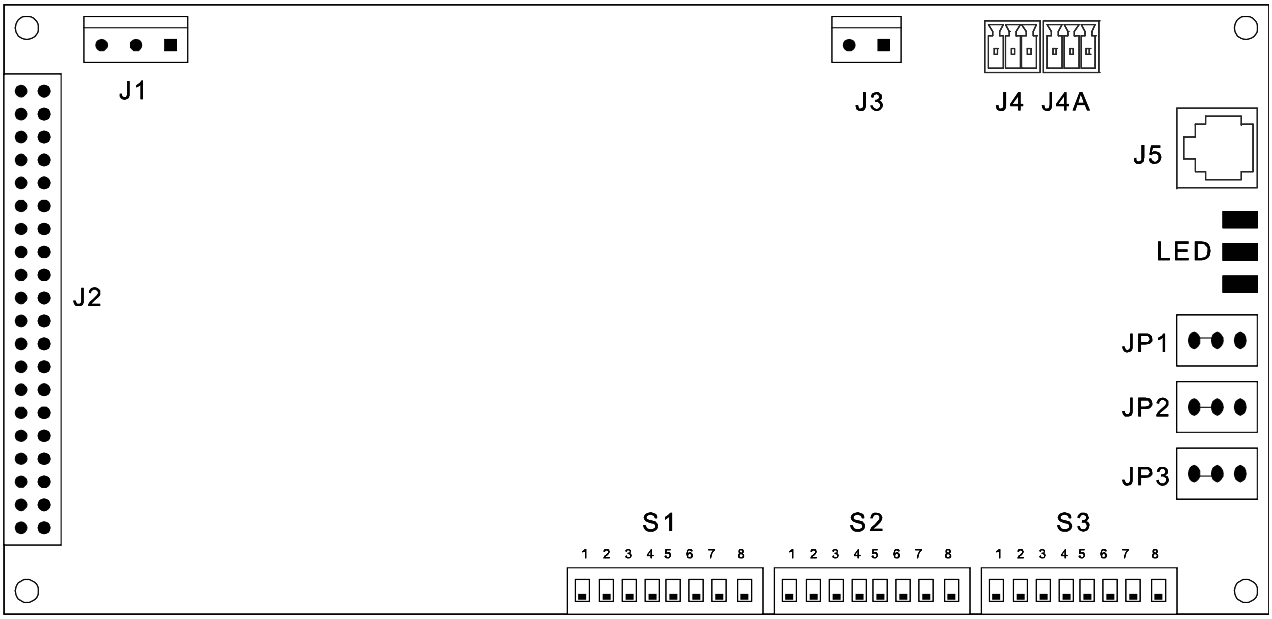

Figure 2-6
SM-DU Circuit Card

CHAPTER 3. MAINTENANCE

SYSTEM MAINTENANCE PROCEDURES

It is recommended to perform the maintenance procedures listed in Table 3-1 every 6-months to ensure continual system operation.

PROCEDURE	REFERENCED IN	COMPLETED (√)
Check ventilation openings for obstructions such as dust, papers, manuals, etc.	--	
Inspect and tighten all installer's connections.	IM582127000, *Chapter 4. Making Electrical Connections.*	

Note: *This table may be reproduced as necessary to record and document system performance.*

Table 3-1
Maintenance Procedures to be Performed at 6-Month Intervals

ADDING A RECTIFIER MODULE TO AN EXISTING RECTIFIER MODULE MOUNTING SHELF SPEC. NO. 588705000

To increase system current capacity, a rectifier module can easily be added to an existing rectifier module mounting shelf Spec. No. 588705000 that contains an empty rectifier module mounting position.

It is recommended that the current limit point be checked whenever a rectifier module is added to or removed from the power system. Refer to “Checking the ACU+ Current Limit Point after Adding or Removing a Rectifier” in “CHAPTER 4. TROUBLESHOOTING AND REPAIR”.

The rectifier module being added is assigned by the ACU+ the lowest available identification number. If desired, you can change the identification number, see “Configuring the ACU+ Identification of Rectifiers” in Chapter 5 of the separate Power System Installation Instructions (IM582127000).

- For rectifier module installation instructions, refer to Rectifier Instructions (UM1R483500E).

ADDING A RECTIFIER OR CONVERTER MODULE TO AN EXISTING MODULE MOUNTING SHELF SPEC. NO. 588705300

To increase system current capacity, a rectifier module can easily be added to an existing module mounting shelf Spec. No. 588705300 that contains an empty rectifier module mounting position. Likewise, to increase subsystem capacity a DC-DC converter module can be added to a module mounting shelf Spec. No. 588705300 that contains an empty converter module mounting position.

Rectifier and converter modules can be inserted or removed with power applied (hot swappable).

Rectifiers modules can be installed in any mounting position of each module mounting shelf. Converters modules can be installed in any of the three far right mounting positions of each module mounting shelf (as viewed from the front). See Figure 3-1.

Note: *Each rectifier and converter module locks into the module mounting shelf by means of a latch located on the bottom of the module. The latch and module handle are interactive. Pushing the handle up into the module's front panel causes the latch to extend to the locking position; pulling the handle down out from the module's front panel causes the latch to retract. See Figure 3-1.*

Warning: ***To prevent damage to the latching mechanism, ensure the handle is in the open position when installing or removing a module. NEVER hold the handle in the closed position when installing a module into a shelf.***

Procedure

1) Unpack the modules.
2) Note the model number located on the front of each module. Model numbers starting with the letter "R" are rectifier modules. Model numbers starting with the letter "C" are converter modules.
3) Place the module into an unoccupied mounting position without sliding it in completely. Rectifiers modules can be installed in any mounting position of each module mounting shelf. Converters modules can be installed in any of the three far right mounting positions of each module mounting shelf (as viewed from the front). See Figure 3-1.
4) Loosen the captive screw on the module's handle. Pull the handle down out from the module's front panel (this will also retract the latch mechanism). See Figure 3-1.
5) Push the module completely into the shelf.
6) Push the handle up into the module's front panel. This will lock the module securely to the shelf. Tighten the captive screw on the handle.
7) Repeat the above steps for each module being installed in the system.
8) After the modules are physically installed in the mounting shelf(s), they are ready for operation immediately after power is supplied to them.

Note: *It is recommended that the current limit point be checked whenever a rectifier is added to or removed from the power system. Refer to "Checking the ACU+ Current Limit Point after Adding or Removing a Rectifier" in "CHAPTER 4. TROUBLESHOOTING AND REPAIR".*

Note: *The rectifier or converter being added is assigned by the ACU+ the lowest available identification number. If desired, you can change the identification number, see "Configuring the ACU+ Identification of Rectifiers" or "Configuring the ACU+ Identification of Converters" in Chapter 5 of the separate Power System Installation Manual (IM582127000).*

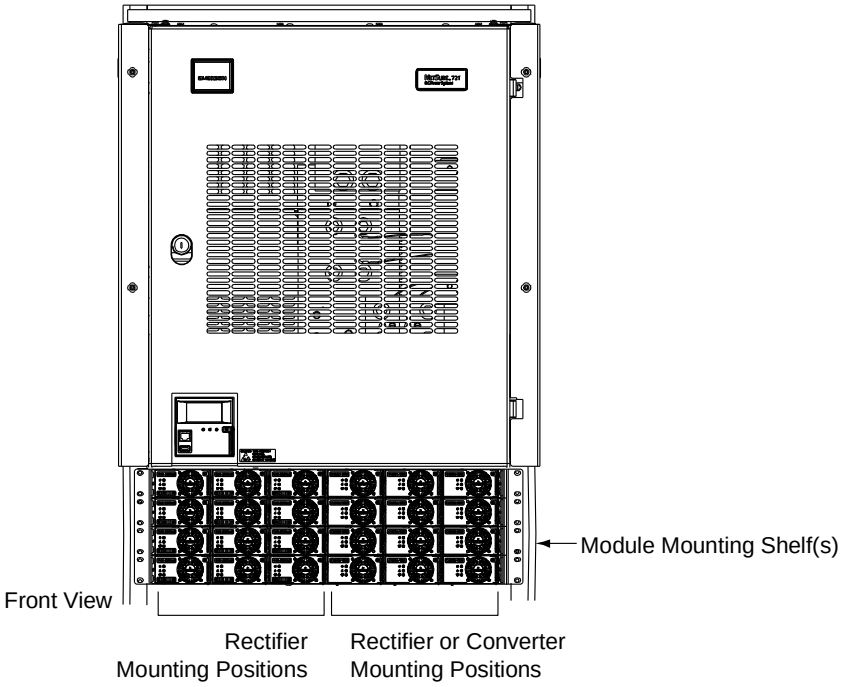

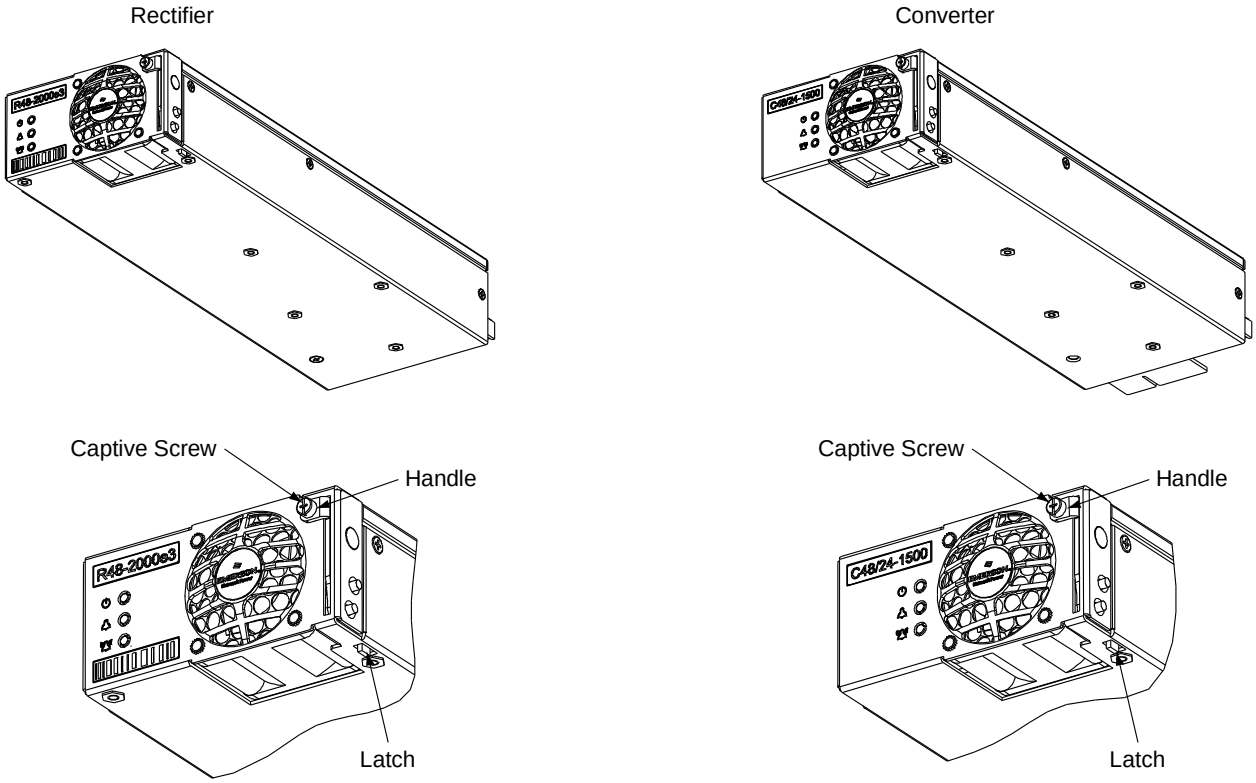

Figure 3-1
Installing Rectifier and Converter Modules in a Spec. No. 588705300 Shelf

INSTALLING A FIELD EXPANSION RECTIFIER MODULE MOUNTING SHELF SPEC. NO. 588705000

Danger: ***Adhere to the "Important Safety Instructions" presented at the front of this document.***

Note: *Refer to Figure 3-2 and Figure 3-3 as this procedure is performed.*

Procedure

1) Install the expansion rectifier module mounting shelf directly below the bottom-most rectifier module mounting shelf in the rack. Use the mounting hardware provided in the expansion busbar kit.

   Hardware build-up is: 12-24 x 3/4" screw and flat washer, (1) set per side.
   12-24 x 3/4" screw and ground washer, (1) set per side.

   Note: *Install the ground washers so the teeth make contact with the metal on the mounting angles. Torque all screws to 65 in-lbs.*

2) On the rear of the expansion rectifier module mounting shelf and the existing shelf installed directly above it, remove the rear shield that covers the output busbars.

Note: *Apply electrical anti-oxidizing compound to busbar mating surfaces before performing the next step.*

3) Secure the existing shelf's busbars to the expansion shelf's mating busbars with the supplied interconnect busbars and hardware.

   Hardware build-up for these connections are:
   1/4-20 x 1" bolt,
   1/4" Belleville lock washer,
   1/4" flat washer.

   Install the Belleville lock washer so the concave side is towards the busbar. Torque all connections to 60 in-lbs.

   If installing a second expansion rectifier module mounting shelf, 1/4-20 nuts (included) are required in lieu of the 1/4-20 x 1" bolts (see Figure 3-2).

4) Disconnect the cable coming from the distribution cabinet from the bottom connector on the bottom-most existing rectifier shelf.

5) Connect the bottom connector on the bottom-most existing rectifier shelf to the top connector on the expansion rectifier shelf.

6) Connect the cable disconnected in step 4) (coming from distribution cabinet) to the bottom connector on expansion rectifier shelf.

7) Replace the rear covers removed in step 2) above.

8) Refer to the Power System Installation Instructions (IM582127000) and connect AC input power to the expansion shelf.

9) Refer to the Rectifier Instructions and install rectifier modules into the expansion shelf as required.

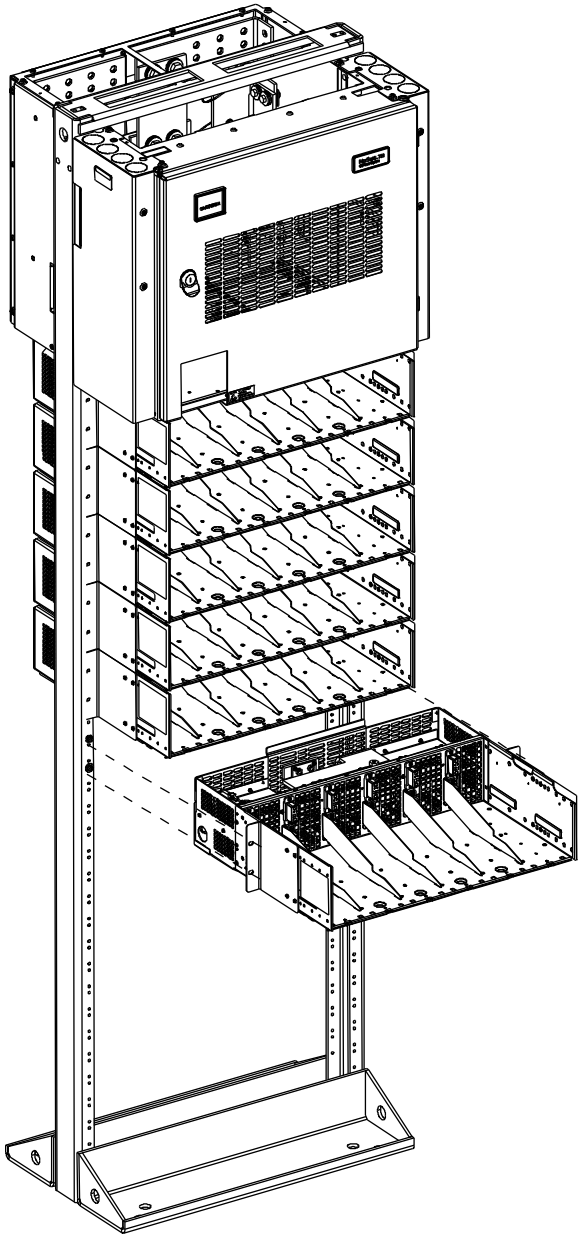

Front View
(Install Expansion
Rectifier Module Mounting Shelf)

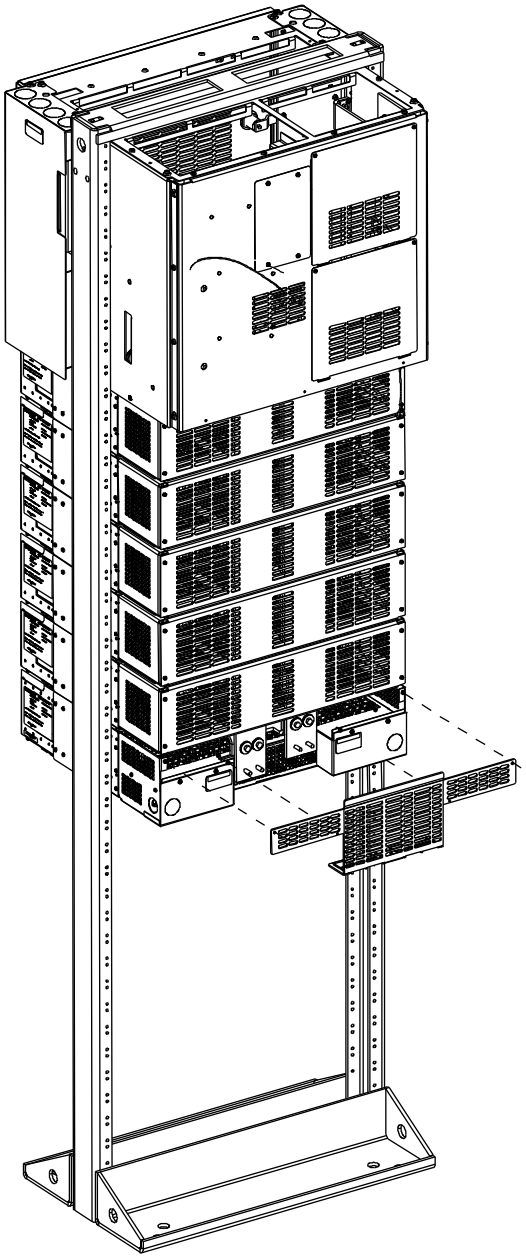

Rear View
(Remove Rear Shield from
Rectifier Module Mounting Shelf
and Shelf Above It)

Figure 3-2 (cont'd on next page)
Installing a Field Expansion Rectifier Module Mounting Shelf Spec. No. 588705000

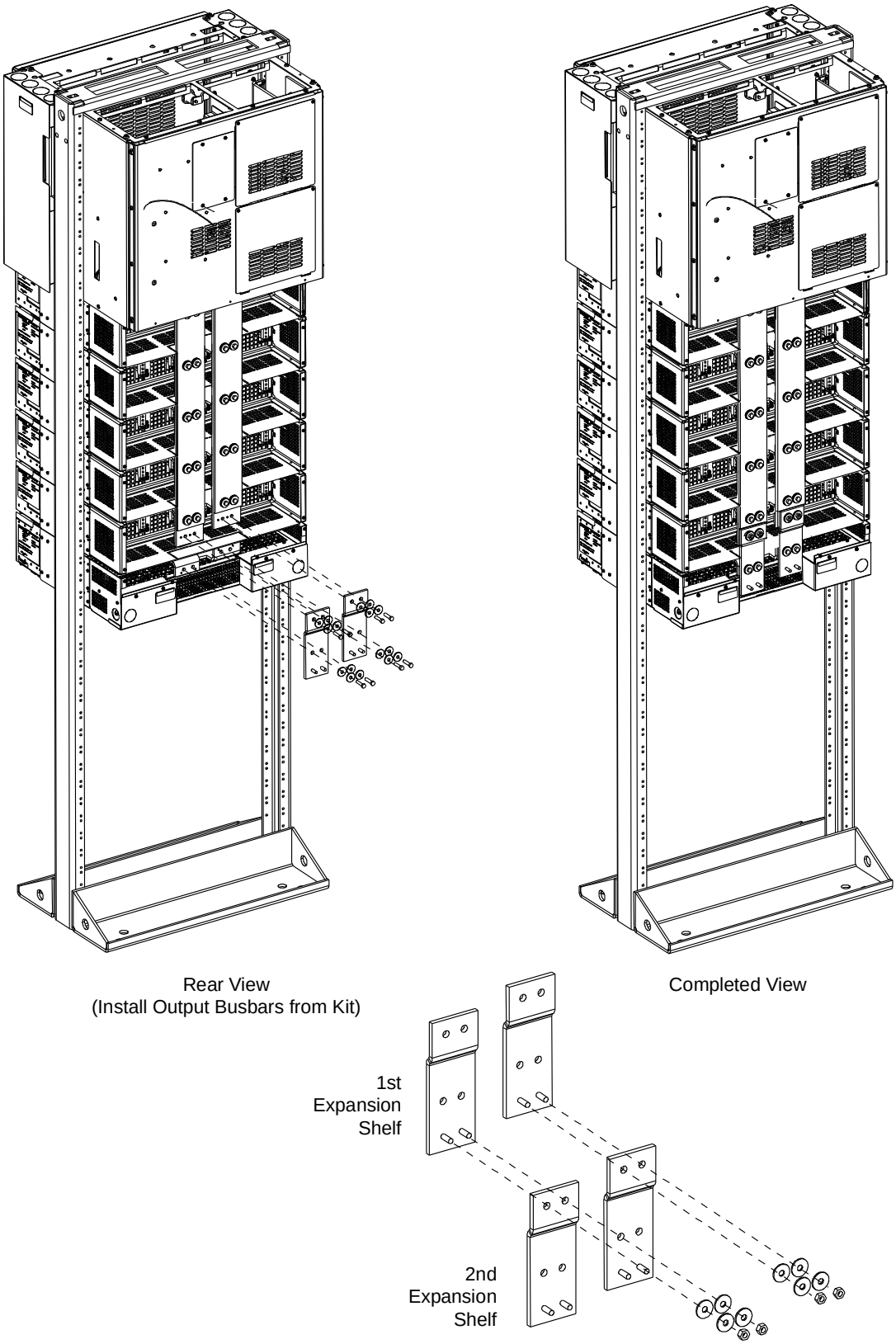

Figure 3-2 (cont'd from previous page)
Installing a Field Expansion Rectifier Module Mounting Shelf Spec. No. 588705000

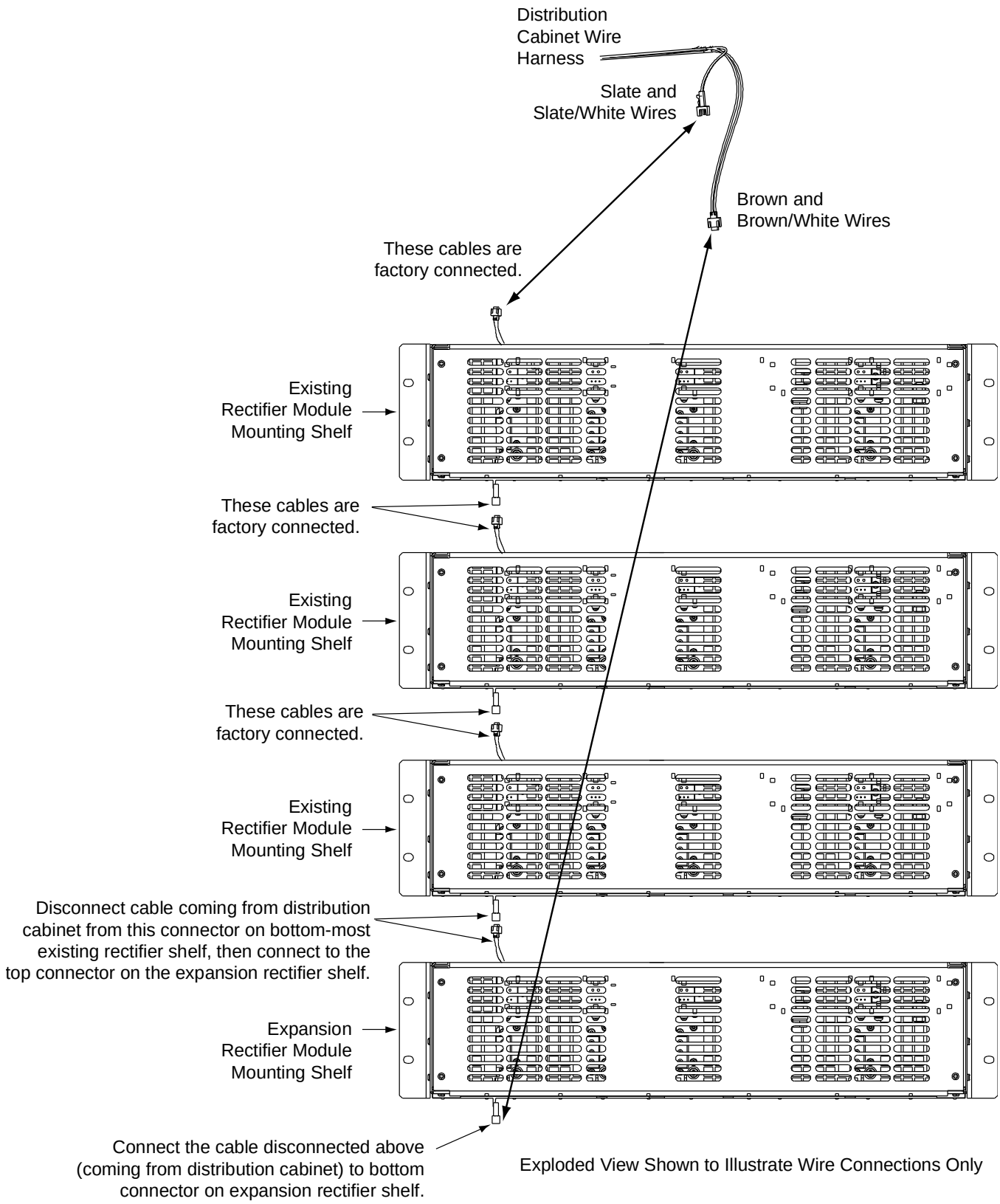

Figure 3-3
ACU+ CAN Bus, Rectifier Module Mounting Shelf Spec. No. 588705000

INSTALLING A FIELD EXPANSION RECTIFIER/CONVERTER MODULE MOUNTING SHELF SPEC. NO. 588705300

Danger: ***Adhere to the "Important Safety Instructions" presented at the front of this document.***

Note: *Refer to Figure 3-4 and Figure 3-5 as this procedure is performed.*

Procedure

1) Remove the busbar rear shield from the existing rectifier/converter shelves. Remove the cut-out panel from the busbar rear shield by gently bending the panel until it snaps from the busbar rear shield.

2) Remove the hardware from the lowest module mounting shelf's -48V, return, and +24V (if present) busbars.

3) Install the expansion module mounting shelf directly below the bottom-most module mounting shelf in the rack. Use the mounting hardware provided with the expansion module mounting shelf.

   Hardware build-up is: 12-24 x 3/4" screw and flat washer, (1) set per side.
   12-24 x 3/4" screw and ground washer, (1) set per side.

   Note: *Install the ground washers so the teeth make contact with the metal on the mounting angles. Torque all screws to 65 in-lbs.*

4) Remove the busbar rear shield from the expansion module mounting shelf.

Note: *Apply electrical anti-oxidizing compound to busbar mating surfaces before performing the next step.*

5) Install the busbars provided with the expansion module mounting shelf between the studs on the expansion module mounting shelf and the studs on the shelf above it. Secure these busbars to the expansion module mounting shelf with the hardware provided with the expansion module mounting shelf. Secure these busbars to the shelf above the expansion module mounting shelf with the hardware previously removed. Torque to 60 in-lbs.

   Hardware build-up for these connections are:
   M6 Nut,
   M6 Belleville lock washer,
   M6 flat washer.

6) Disconnect the cable coming from the distribution cabinet from the connector on the bottom-most existing module mounting shelf and connect this cable to the same connector on the expansion module mounting shelf.

7) Connect the open connector on the bottom-most existing module mounting shelf to the open connector on the expansion module mounting shelf.

8) Re-install the rear busbar shield previously removed from the existing module mounting shelf. Re-install the rear busbar shield previously removed from the expansion module mounting shelf.

9) Refer to the Power System Installation Instructions (IM582127000) and connect AC input power to the expansion module mounting shelf.

10) Refer to the Power System Installation Instructions (IM582127000) and install rectifier and converter modules into the expansion module mounting shelf as required.

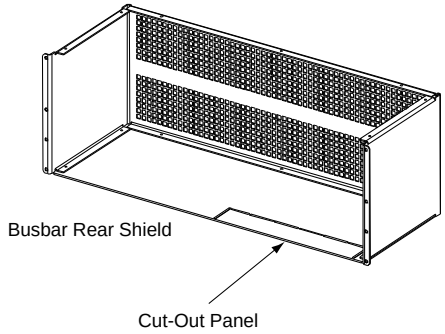

1. Remove busbar rear shield from existing rectifier/converter shelves. Remove the cut-out panel from the busbar rear shield.

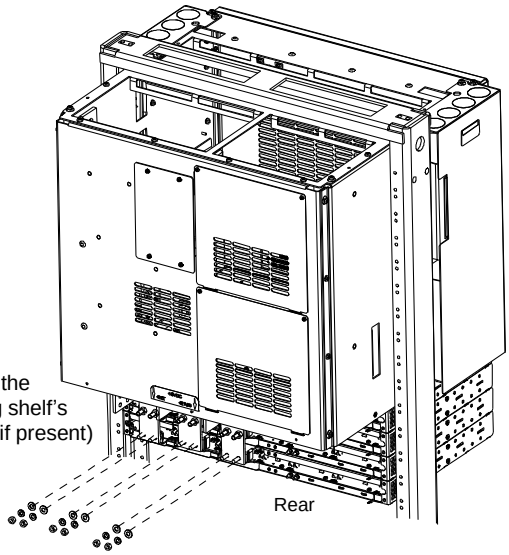

2. Remove hardware from the lowest module mounting shelf's -48V, return, and +24V (if present) busbars.

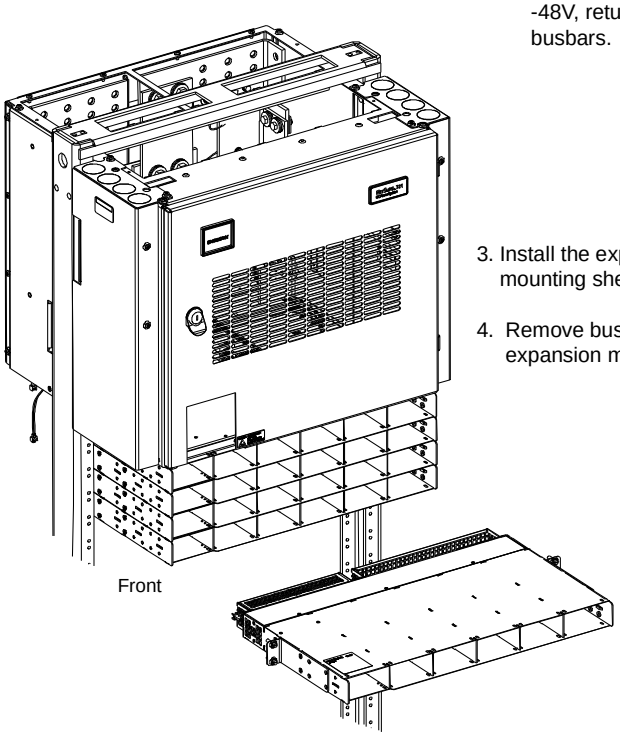

3. Install the expansion module mounting shelf into the rack.

4. Remove busbar rear shield from expansion module mounting shelf.

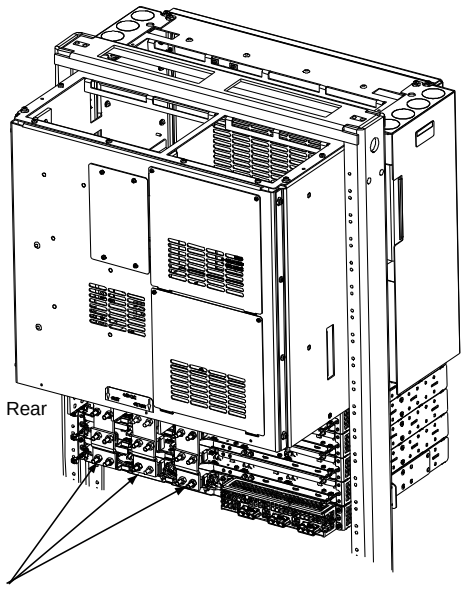

5. Install the busbars provided with the expansion module mounting shelf between the shelves. Torque to 60 in-lbs.

6. Re-install the rear busbar shields previously removed.

Figure 3-4
Installing a Field Expansion Module Mounting Shelf Spec. No. 588705300

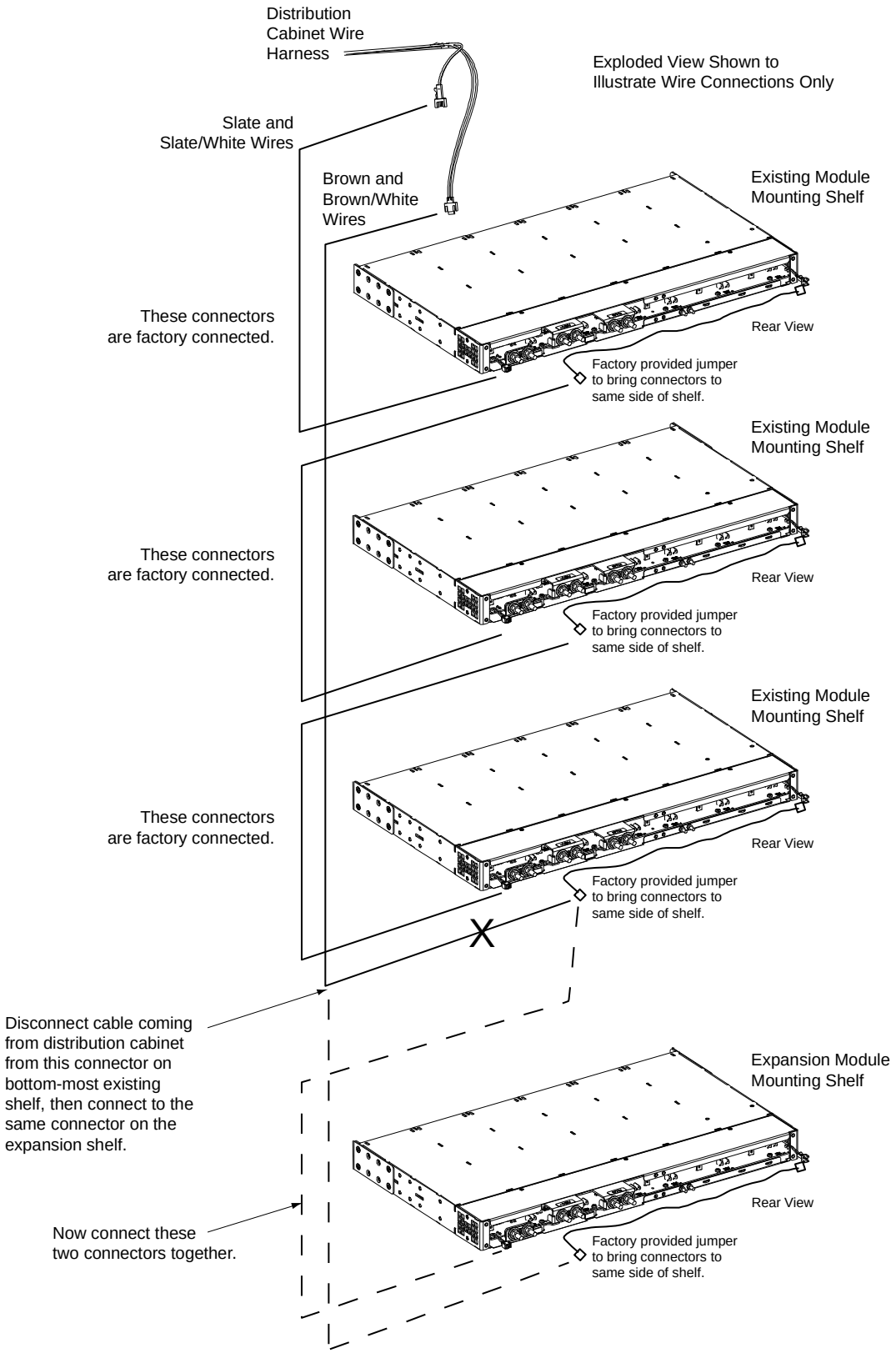

Figure 3-5
ACU+ CAN Bus, Rectifier Module Mounting Shelf Spec. No. 588705300

CHANGING THE ACU+ LVD CONTROL LEVEL FOR A CONTACTOR

The ACU+ Controller has two available LVD control levels (LVD1 and LVD2). The level used to control a contactor is determined by which connector on the LVD circuit card its control leads are plugged into. To change the LVD control level for a contactor, simply switch which LVD connector it is plugged into (if an open connector is available) on the LVD circuit card. Refer to Figure 4-14 and Figure 4-15 for connector location and function.

Note: *DO NOT change a Low Voltage Load Disconnect contactor to LVD Control Level 2 (LVD2) if the system is furnished with a Low Voltage Battery Disconnect contactor.*

ADDING A SUPPLEMENTAL BAY IN THE FIELD

Refer to the Power System Installation Instructions (IM582127000) for procedures detailing mounting and wiring of the supplemental bay.

Supplied with the supplemental bay is a USB drive which contains a “SettingParam.run” file. Download this file into the ACU+ Controller to program the ACU+ Controller for use with the newly installed supplemental bay. Refer to the ACU+ Instructions (UM1M820BNA) for a download procedure. There are also labels located near the SM-DU and SM-DU+ in the supplemental bay that detail the ACU+ settings for this bay.

Once the ACU+ has been programmed for the newly installed supplemental bay, refer to the ACU+ Instructions (UM1M820BNA) and save a copy of the “SettingParam.run” file.

CHAPTER 4. TROUBLESHOOTING AND REPAIR

CONTACT INFORMATION

Support contact information is provided on the inside of the back cover of this document.

CONTROLLER, RECTIFIERS, AND OPTIONAL CONVERTERS

For troubleshooting and repair instructions on these units, refer to the following documents.

- ACU+ Controller Instructions (UM1M820BNA)
- Rectifier Instructions (UM1R483500E or UM1R482000E3)
- Converter Instructions (UM1C48241500)

ACU+ CONTROLLER CONFIGURATION

If any ACU+ Controller configuration settings were changed, refer to the ACU+ Instructions (UM1M820BNA) and save a copy of the configuration file. This file can be used to restore the ACU+ Controller settings, if required, at a later date.

- Note that provided on a USB drive furnished with the system is an ACU+ configuration drawing (C-drawing) and the ACU+ configuration files loaded into the ACU+ as shipped.

SYSTEM TROUBLESHOOTING INFORMATION

This system is designed for ease in troubleshooting and repair. The various indicators as described in CHAPTER 2. OPERATING PROCEDURES and in the Controller, Rectifier, and Converter Instructions are designed to isolate failure to a specific element. Once the faulty element has been identified, refer to "*Replacement Information*" and "*Replacement Procedures*" in this chapter.

Troubleshooting Alarm Conditions on the ACU+ Controller

The ACU+ Controller displays alarm conditions as listed in the Available Alarms section of the ACU+ Instructions (UM1M820BNA). Programmable external alarm relays are also available. Refer to the System Installation Instructions (IM582127000) and the configuration drawing (C-drawing) supplied with your power system documentation for your alarm relay configurations.

The ACU+'s ***Active Alarm*** and ***Alarm History*** submenus allow the User to view alarm details. Refer to the ACU+ Instructions (UM1M820BNA) to access these menus.

Checking the ACU+ Current Limit Point after Adding or Removing a Rectifier

If a rectifier is added to the power system, the system current limit point will automatically increase by the percentage each existing rectifier was set to provide prior to the addition.

If a rectifier is removed from the system (and the Rect Comm Fail alarm is reset), the current limit point will remain unchanged unless the capacity of the remaining rectifiers is not sufficient to maintain the present current limit point. If that happens, the current limit point will automatically increase to the maximum (121% of the remaining rectifiers).

It is recommended that the current limit point be checked whenever a rectifier is added to or removed from the power system.

Procedure

1) With the Main screen displayed, press **ENT** to go to the Main Menu. Navigate to and select "**Settings**" (ENT).
2) If a password screen opens, a password must be entered to allow the User to make adjustments. If a password was previously entered and has not yet timed out, skip this step and proceed to step 3). Otherwise, to enter a password, with the cursor at the User Name field (default is "Admin"), press the down arrow key to move cursor down to the password line. Press **ENT**. "0" is highlighted. Press the up arrow key once to change the "0" to"1" (default password is "1"), then press **ENT** twice. *(**Note:** If you have been assigned a unique User Name and password, follow this procedure to enter these.)*
3) With the Settings menu screen displayed, navigate to and select "**Rectifier**" (ENT) / "**All Rect Set**" (ENT).
4) Navigate to "**Current Limit Pt**". The current limit in amperes is displayed. If no change is required, go to step 6). To make a change, proceed with step 5).
5) With the cursor at "Current Limit Pt", press **ENT** to change the current limit point. Use the up or down arrow keys to set as desired, then press **ENT**.
6) Return to the Main screen by repeatedly pressing **ESC** (escape).

Clearing a Rectifier Communications Fail Alarm after Removing a Rectifier

If a rectifier module is removed from the system, a rectifier communications failure alarm is generated. If the rectifier module will not be replaced, the alarm should be cleared as described in the following procedure.

Procedure

1) With the Main screen displayed, press **ENT** to go to the Main Menu. Navigate to and select "**Manual**" (ENT).
2) If a password screen opens, a password must be entered to allow the User to make adjustments. If a password was previously entered and has not yet timed out, skip this step and proceed to step 3). Otherwise, to enter a password, with the cursor at the User Name field (default is "Admin"), press the down arrow key to move cursor down to the password line. Press **ENT**. "0" is highlighted. Press the up arrow key once to change the "0" to"1" (default password is "1"), then press **ENT** twice. *(**Note:** If you have been assigned a unique User Name and password, follow this procedure to enter these.)*
3) With the Manual menu screen displayed, navigate to and select "**Rectifier**" (ENT) / "**All Rect Ctrl**" (ENT).
4) Navigate to "**Clear Comm Fail**". Press **ENT**. "**Yes**" highlights.
5) Press **ENT** to select the operation. Press **ENT** again to confirm.
6) Return to the Main screen by repeatedly pressing **ESC** (escape).

Clearing a Converter Communications Fail Alarm after Removing a Converter

If a converter module is removed from the system, a converter communications failure alarm is generated. If the converter module will not be replaced, the alarm should be cleared as described in the following procedure.

Procedure

1) With the Main screen displayed, press **ENT** to go to the Main Menu. Navigate to and select "**Manual**" (ENT).

2) If a password screen opens, a password must be entered to allow the User to make adjustments. If a password was previously entered and has not yet timed out, skip this step and proceed to step 3). Otherwise, to enter a password, with the cursor at the User Name field (default is "Admin"), press the down arrow key to move cursor down to the password line. Press **ENT**. "0" is highlighted. Press the up arrow key once to change the "0" to"1" (default password is "1"), then press **ENT** twice. *(**Note:** If you have been assigned a unique User Name and password, follow this procedure to enter these.)*
3) With the Manual menu screen displayed, navigate to and select "**Converter**" (ENT) / "**All Conv Ctrl**" (ENT).
4) Navigate to "**Clear Comm Fail**". Press **ENT**. "**Yes**" highlights.
5) Press **ENT** to select the operation. Press **ENT** again to confirm.
6) Return to the Main screen by repeatedly pressing **ESC** (escape).

Clearing a Rectifier Lost Alarm

If the ACU+ Controller resets while a rectifier communications fail alarm is active, the rectifier communications fail alarm is replace with a rectifier lost alarm. To clear the alarm, perform the following procedure.

Procedure

1) With the Main screen displayed, press **ENT** to go to the Main Menu. Navigate to and select "**Manual**" (ENT).
2) If a password screen opens, a password must be entered to allow the User to make adjustments. If a password was previously entered and has not yet timed out, skip this step and proceed to step 3). Otherwise, to enter a password, with the cursor at the User Name field (default is "Admin"), press the down arrow key to move cursor down to the password line. Press **ENT**. "0" is highlighted. Press the up arrow key once to change the "0" to"1" (default password is "1"), then press **ENT** twice. *(**Note:** If you have been assigned a unique User Name and password, follow this procedure to enter these.)*
3) With the Manual menu screen displayed, navigate to and select "**Rectifier**" (ENT) / "**All Rect Ctrl**" (ENT).
4) Navigate to "**Clear Rect Lost**". Press **ENT**. "**Clear**" highlights.
5) Press **ENT** to select the operation. Press **ENT** again to confirm.
6) Return to the Main screen by repeatedly pressing **ESC** (escape).

Clearing a Converter Lost Alarm

If the ACU+ Controller resets while a converter communications fail alarm is active, the converter communications fail alarm is replace with a converter lost alarm. To clear the alarm, perform the following procedure.

Procedure

1) With the Main screen displayed, press **ENT** to go to the Main Menu. Navigate to and select "**Manual**" (ENT).
2) If a password screen opens, a password must be entered to allow the User to make adjustments. If a password was previously entered and has not yet timed out, skip this step and proceed to step 3). Otherwise, to enter a password, with the cursor at the User Name field (default is "Admin"), press the down arrow key to move cursor down to the password line. Press **ENT**. "0" is highlighted. Press the up arrow key once to change the "0" to"1" (default password is "1"), then

press **ENT** twice. *(**Note:** If you have been assigned a unique User Name and password, follow this procedure to enter these.)*

3) With the Manual menu screen displayed, navigate to and select "**Converter**" (ENT) / "**All Conv Ctrl**" (ENT).
4) Navigate to "**Clear Conv Lost**". Press **ENT**. "**Clear**" highlights.
5) Press **ENT** to select the operation. Press **ENT** again to confirm.
6) Return to the Main screen by repeatedly pressing **ESC** (escape).

REPLACEMENT INFORMATION

Replacement Assemblies

When a trouble symptom is localized to a faulty rectifier module, converter module, controller, or system circuit card; that particular device or circuit card should be replaced in its entirety. No attempt should be made to troubleshoot or repair individual components on any rectifier module, converter module, controller, or circuit card.

Refer to SAG582127000 (System Application Guide) for replacement part numbers.

Replacement Cables

Refer to SAG582127000 (System Application Guide) for replacement part numbers.

REPLACEMENT PROCEDURES

Danger: Adhere to the "Important Safety Instructions" presented at the front of this document.

Replacing a Rectifier Module (in a Spec. No. 588705000 Shelf)

Refer to the Rectifier Instructions (UM1R483500E) for a rectifier module replacement procedure. Refer also to *System Troubleshooting Information* in this chapter.

The rectifier module being replaced is assigned by the ACU+ the lowest available identification number. If desired, you can change the identification number, see "Configuring the ACU+ Identification of Rectifiers" in Chapter 5 of the separate Power System Installation Instructions (IM582127000).

Replacing a Rectifier or Converter Module (in a Spec. No. 588705300 Shelf)

Refer to the Rectifier User Instructions (UM1R482000E3) or Converter User Instructions (UM1C48241500) for a rectifier and converter module replacement procedure. Refer also to *System Troubleshooting Information* in this chapter.

The rectifier or converter module being replaced is assigned by the ACU+ the lowest available identification number. If desired, you can change the identification number, see "Configuring the ACU+ Identification of Rectifiers" or "Configuring the ACU+ Identification of Converters" in Chapter 5 of the separate Power System Installation Manual (IM582127000).

Replacing the ACU+ Controller

Refer to the ACU+ Instructions (UM1M820BNA) for a controller replacement procedure.

Replacing a Distribution Device

General

Replace distribution devices with the same type and rating. Refer to System Application Guide SAG582127000 for part numbers.

Distribution Fuse "Alarm Fuse" Replacement

If a distribution fuse opens, the associated alarm fuse opens. Replace the distribution fuse before replacing the alarm fuse.

Procedure

1) An alarm fuse is removed by pulling it straight out of the fuseholder. If the alarm fuse is located in a modular fuse carrier, hold the fuse carrier in place with your thumb while pulling on the alarm fuse to prevent the entire carrier from inadvertently being pulled out.

2) Safety fuse covers are provided for all Bussmann GMT type fuses installed in the system. These covers snap onto the fuses and provide protection from exposed electrical terminations when a fuse opens. Insure that the safety fuse cover is installed after replacing a fuse. Refer to Figure 4-1 for installation details.

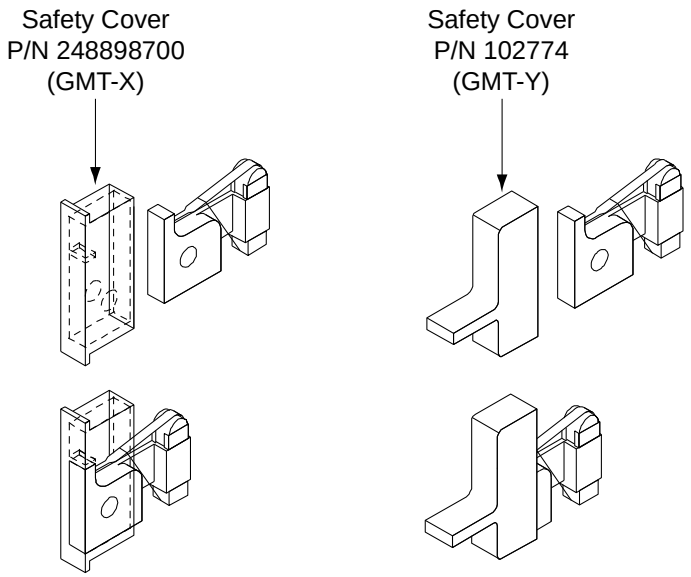

Figure 4-1
Installation of Safety Fuse Covers

Replacing a TPS/TLS Fuse

Procedure

Note: *Refer to Figure 4-2 as this procedure is performed.*

1) Open the distribution cabinet's front door by turning the latch in the counterclockwise position.
2) Remove the fuse carrier from the mounted fuseholder body by pulling it straight out.
3) Remove the open fuse from the fuse carrier and replace it with the same type and rating.
4) Replace the alarm fuse located in the front of the fuse carrier with the same type and rating. Ensure that a plastic safety cover is installed on the alarm fuse.
5) Push the fuse carrier securely back into the mounted fuseholder body. Note that a polarizing key on the bottom of the carrier prevents the carrier from being inserted upside down.
6) Verify no Fuse Alarms are active.
7) Close the distribution cabinet's front door. Turn the latch clockwise to secure the door.

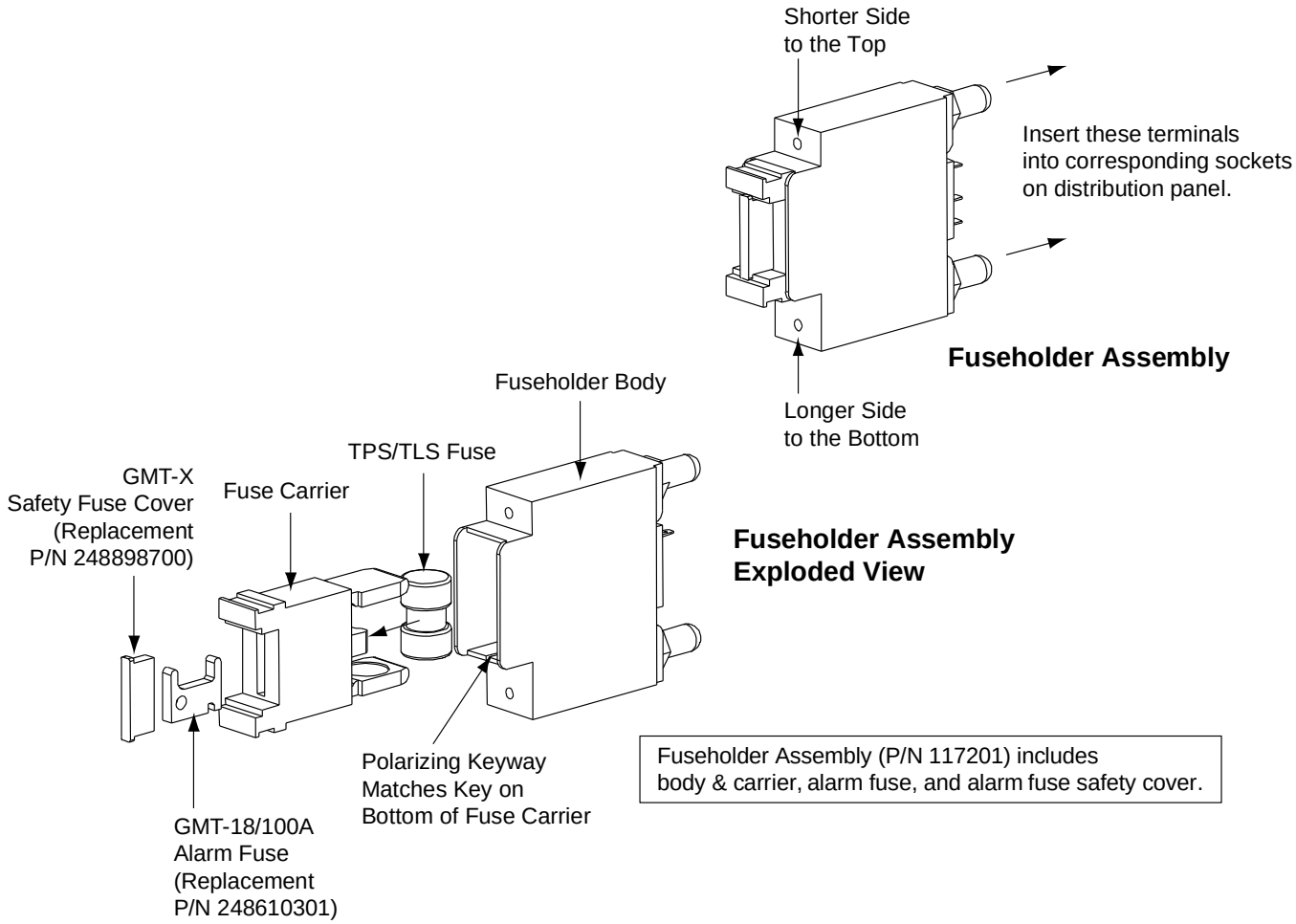

Figure 4-2
Replacing a TPS/TLS Fuseholder and/or Fuse

Replacing a Bullet Nose Fuseholder

Procedure

Note: *Refer to Figure 4-2 as this procedure is performed.*

1) Open the distribution cabinet's front door by turning the latch in the counterclockwise position.
2) Remove the fuse carrier from the mounted fuseholder body by pulling it straight out. Hold the fuseholder body while you pull the fuse carrier from the body.
3) Gently rock the defective fuseholder up and down while pulling firmly outward until the fuseholder is free from the distribution panel.
4) Orient the fuseholder as shown in Figure 4-2. Insert the terminals on the rear of the fuseholder into their corresponding sockets on the distribution panel. Ensure the alarm contact on the back of the fuseholder makes contact with the alarm terminal on the spring strip. Push fuseholder in firmly until fully seated in the distribution panel.
5) Push the fuse carrier securely back into the mounted fuseholder body. Note that a polarizing key on the bottom of the carrier prevents the carrier from being inserted upside down.
6) Verify no Fuse Alarms are active.
7) Close the distribution cabinet's front door. Turn the latch clockwise to secure the door.

Replacing a Bullet Nose Circuit Breaker

Procedure

Note: *Refer to Figure 4-3 as this procedure is performed.*

1) Open the distribution cabinet's front door by turning the latch in the counterclockwise position.
2) Operate the defective circuit breaker to the OFF position.
3) Gently rock the defective circuit breaker up and down while pulling firmly outward until the breaker is free from the distribution panel.
4) Ensure that the circuit breaker is in the OFF position, and is of the correct rating.
5) Orient the circuit breaker as shown in Figure 4-3. Insert the terminals on the rear of the circuit breaker into their corresponding sockets on the distribution panel. Ensure the alarm contact on the back of the circuit breaker makes contact with the alarm terminal on the spring strip. Push distribution device in firmly until fully seated in the distribution panel.
6) Operate the replacement circuit breaker to the ON position.
7) Verify no Circuit Breaker Alarms are active.
8) Close the distribution cabinet's front door. Turn the latch clockwise to secure the door.

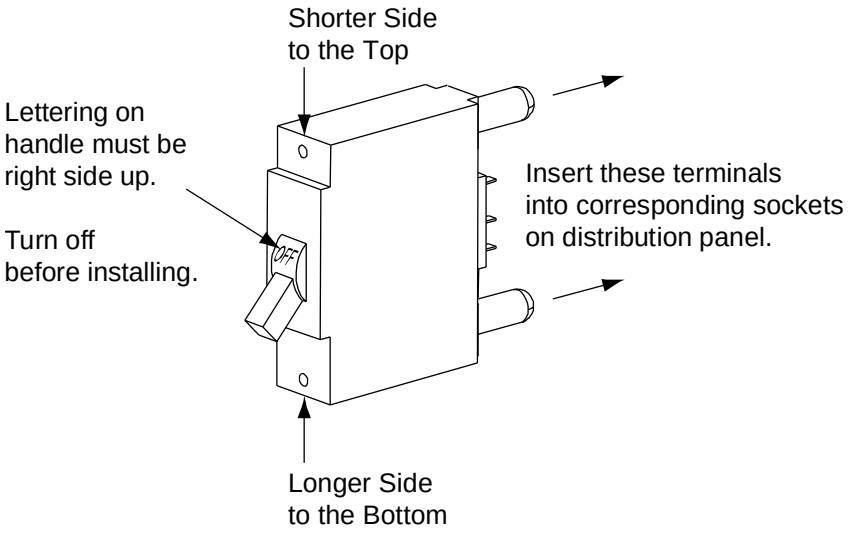

Figure 4-3
Replacing a Bullet Nose Circuit Breaker

Replacing a TPH Fuse

Procedure

Note: *Refer to Figure 4-4 as this procedure is performed.*

1) Open the distribution cabinet's front door by turning the latch in the counterclockwise position.
2) Remove the fuse carrier from the mounted fuseholder body by grasping its handle and pulling straight out.
3) Remove the open fuse from the fuse carrier and replace it with the same type and rating.
4) Push the fuse carrier securely back into the mounted fuseholder body.
5) On the distribution panel, locate the open alarm fuse associated with the TPH fuse being replaced. Replace the alarm fuse with the same type and rating. Ensure that a plastic safety cover is installed on the alarm fuse.
6) Close the distribution cabinet's front door. Turn the latch clockwise to secure the door.

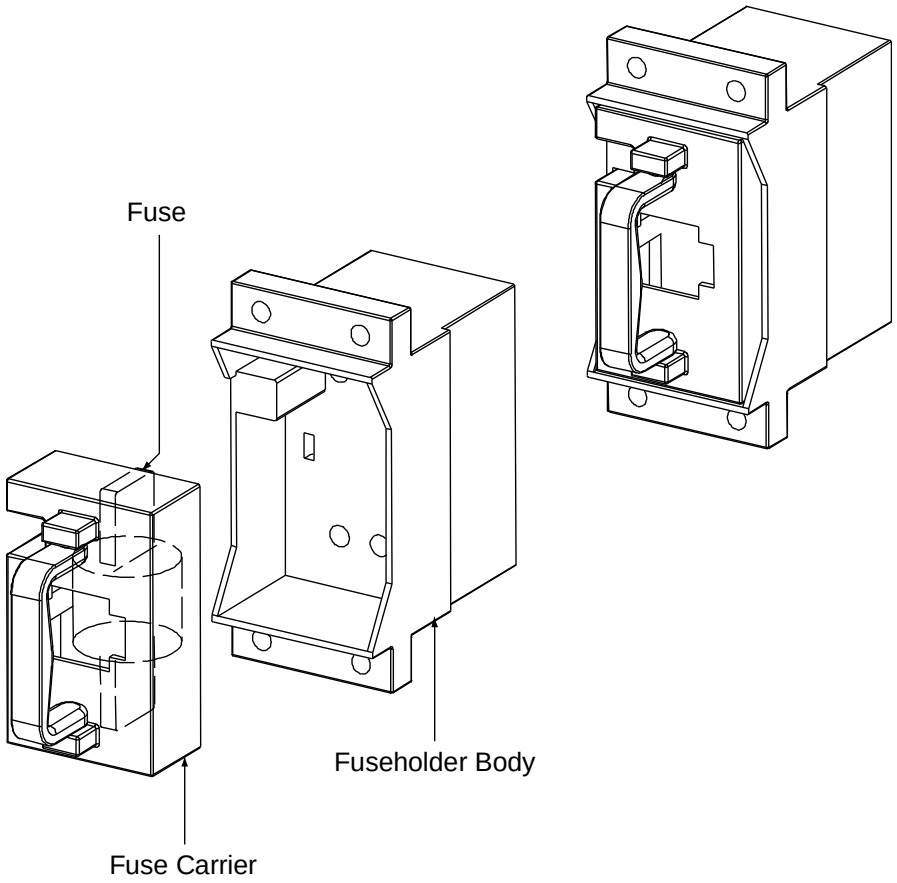

Figure 4-4
Replacing a TPH Fuse

Replacing a TPL-B Fuse

Procedure

Note: *Refer to Figure 4-5 as this procedure is performed.*

1) Open the distribution cabinet's front door by turning the latch in the counterclockwise position.
2) Remove the fuse case from the mounted fuse block by grasping its handle and pulling it straight out.
3) Open the fuse case.
4) Remove the open fuse from the fuse case and replace it with the same type and rating.
5) Close the fuse case.
6) Push the fuse case securely back into the mounted fuse block.
7) Replace the alarm fuse located in the front of the TPL-B fuse block. Replace only with a fuse of the same type and rating. Ensure that a plastic safety cover is installed on the alarm fuse.
8) Close the distribution cabinet's front door. Turn the latch clockwise to secure the door.

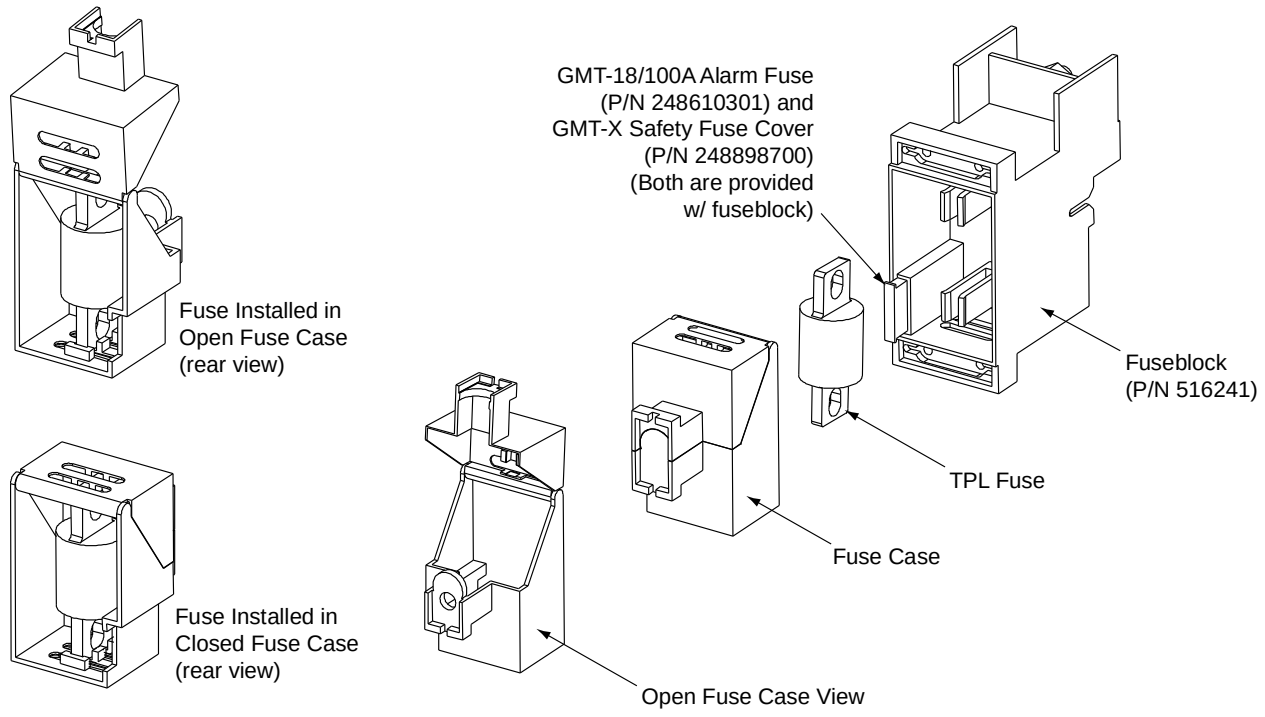

Figure 4-5
Replacing a TPL-B Fuse

Replacing a GJ/218 Circuit Breaker

Procedure

Note: *Refer to Figure 4-6 as this procedure is performed.*

1) Open the distribution cabinet's front door by turning the latch in the counterclockwise position.

2) Operate the defective circuit breaker to the OFF position.

Danger: The bolts being removed in the following step may be at system potential. Use insulated tools.

3) Remove the hardware securing the circuit breaker to the distribution panel and partially remove the circuit breaker.

4) Record each alarm wire located on the back of the circuit breaker (color and location on circuit breaker). Wiring diagrams are provided in Figure 4-6, Figure 4-7, and Figure 4-8. Carefully disconnect the alarm wiring from the back of the circuit breaker, ensuring the exposed end does not contact any energized circuit.

5) **Shunted Breakers Only:** Record each shunt wire located on the back of the circuit breaker (color and location on circuit breaker). Wiring diagrams are provided in Figure 4-6, Figure 4-7, and Figure 4-8. Carefully disconnect the shunt wiring from the back of the circuit breaker, ensuring the exposed end does not contact any energized circuit.

6) Ensure that the replacement circuit breaker is in the OFF position, and is of the correct rating and type (electrical trip/mechanical trip or electrical trip only). Orient the circuit breaker over its mounting location. Re-attach the alarm wiring and shunt wiring (if applicable) to the back of the circuit breaker as recorded above. Wiring diagrams are provided in Figure 4-6, Figure 4-7, and Figure 4-8.

Danger: The bolts being installed in the following step may be at system potential. Use insulated tools.

7) Install the replacement circuit breaker into its mounting position and secure with the hardware previously removed. Torque to 60 in-lbs.

8) Transfer the circuit breaker guard from the old circuit breaker to the new circuit breaker.

9) Operate the replacement circuit breaker to the ON position.

10) Verify no Circuit Breaker Alarms are active.

11) Close the distribution cabinet's front door. Turn the latch clockwise to secure the door.

INSTALLING CIRCUIT BREAKER

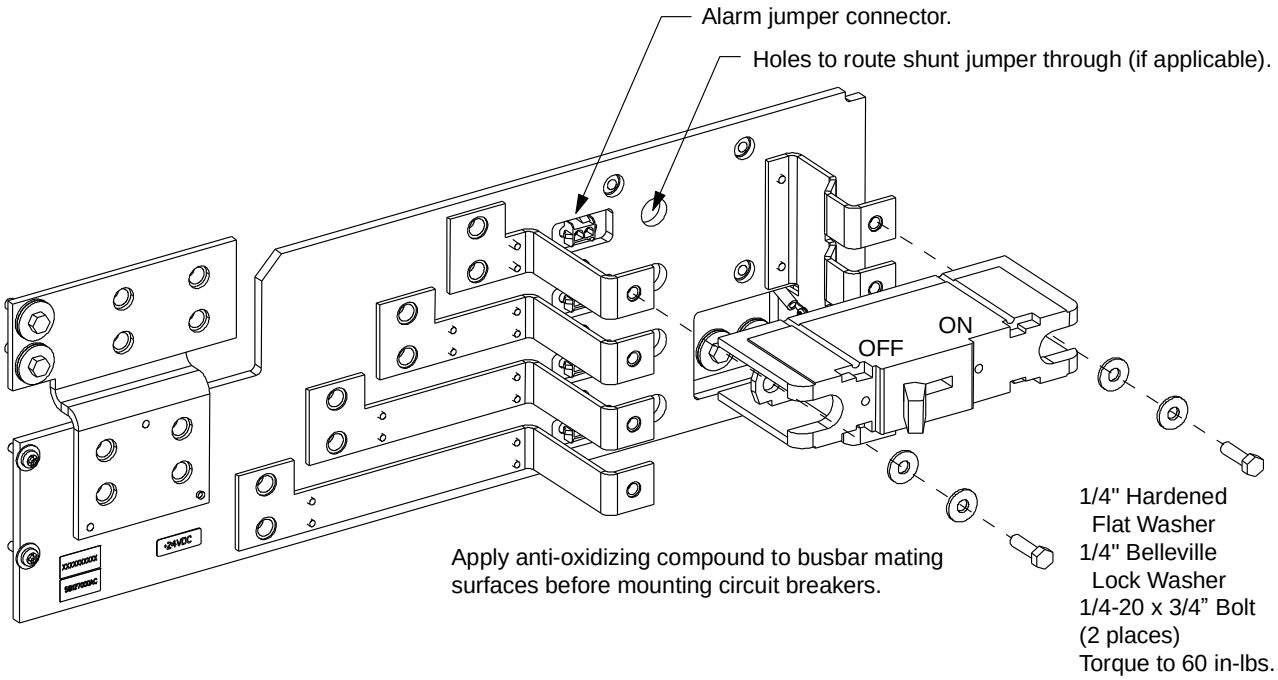

INSTALLING CIRCUIT BREAKER GUARD

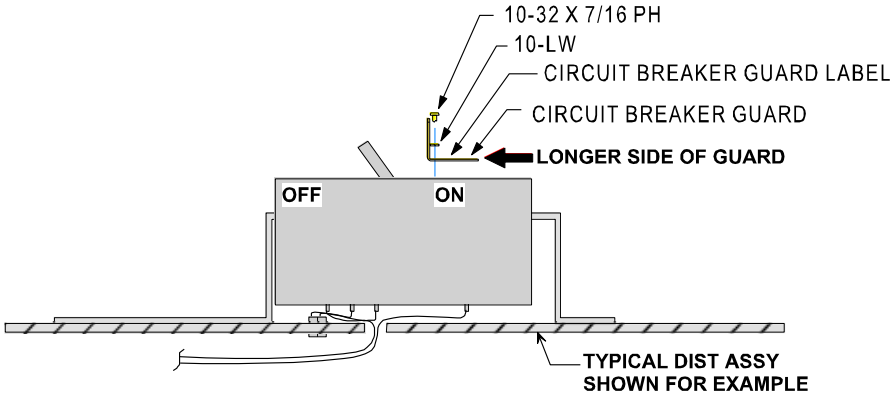

ALARM WIRING (BREAKERS W/OUT SHUNTS)

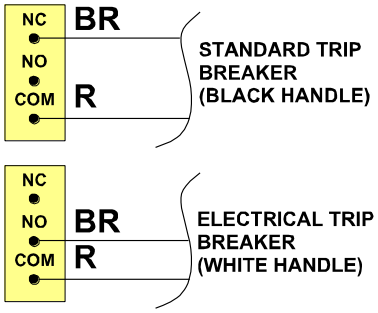

ALARM WIRING (BREAKERS WITH SHUNTS)

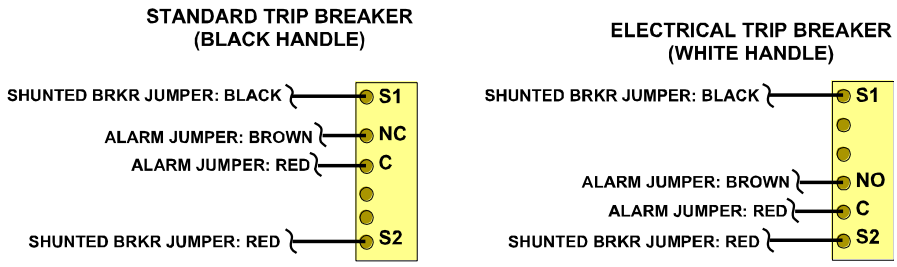

Figure 4-6 (cont'd on next page)
Replacing a GJ/218 Circuit Breaker (1-Pole)

INSTALLING CIRCUIT BREAKER

2-pole breaker shown.
3-pole and 4-pole breakers similar.

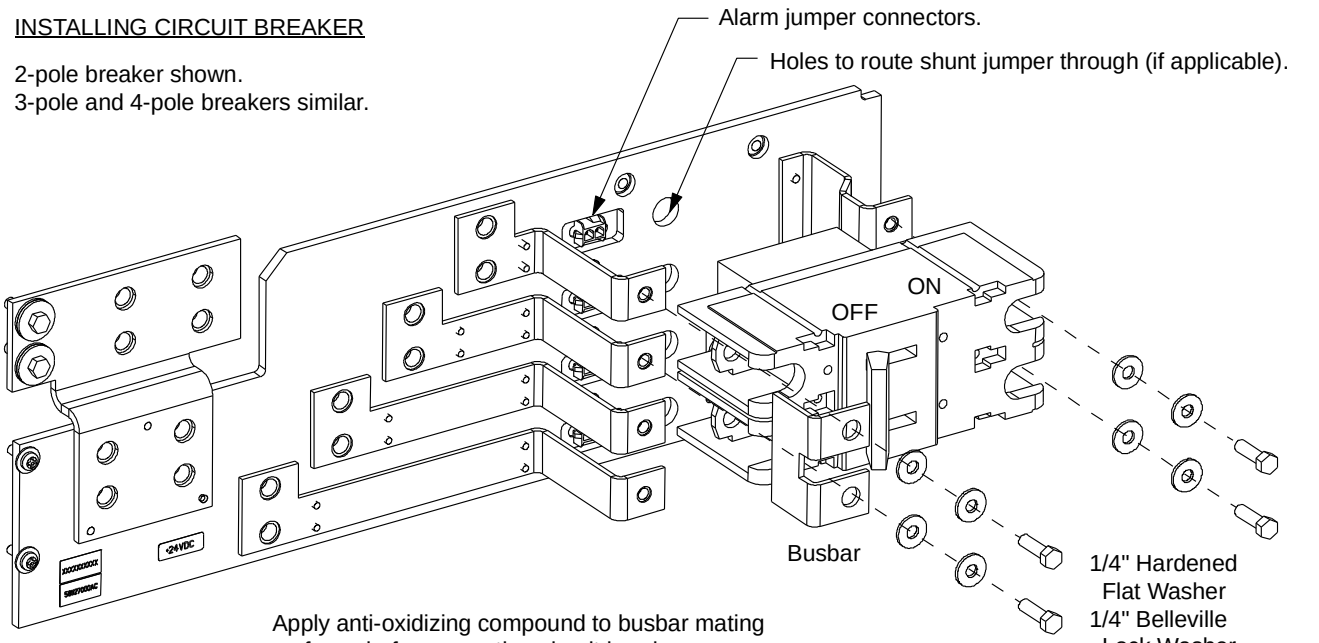

INSTALLING CIRCUIT BREAKER GUARD

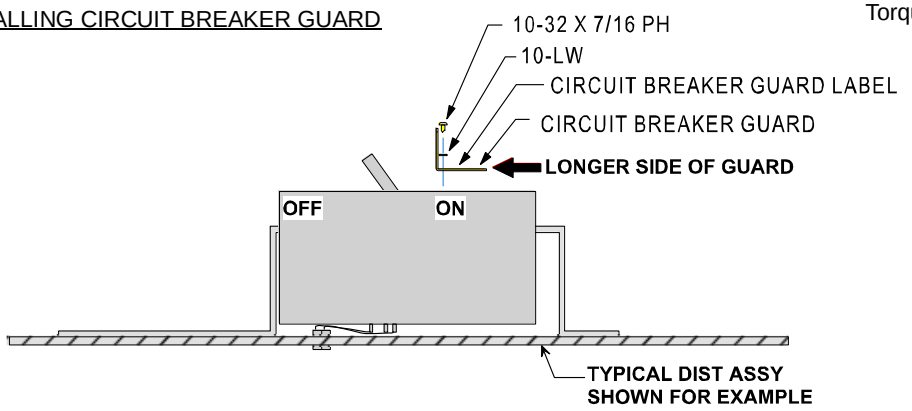

ALARM WIRING (BREAKERS W/OUT SHUNTS)

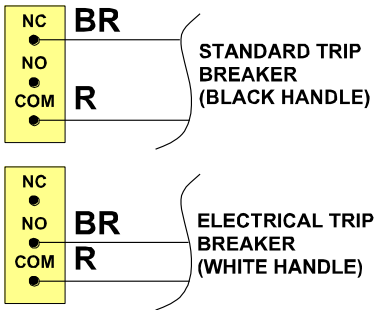

ALARM WIRING (BREAKERS WITH SHUNTS)

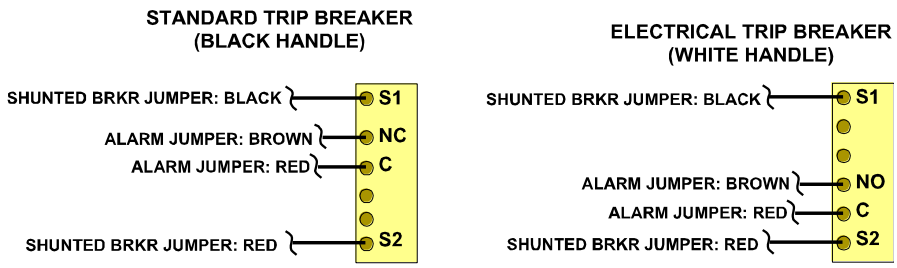

Figure 4-6 (cont'd from previous page)
Installing a GJ/218 Circuit Breaker (2-Pole, 3-Pole, 4-Pole)

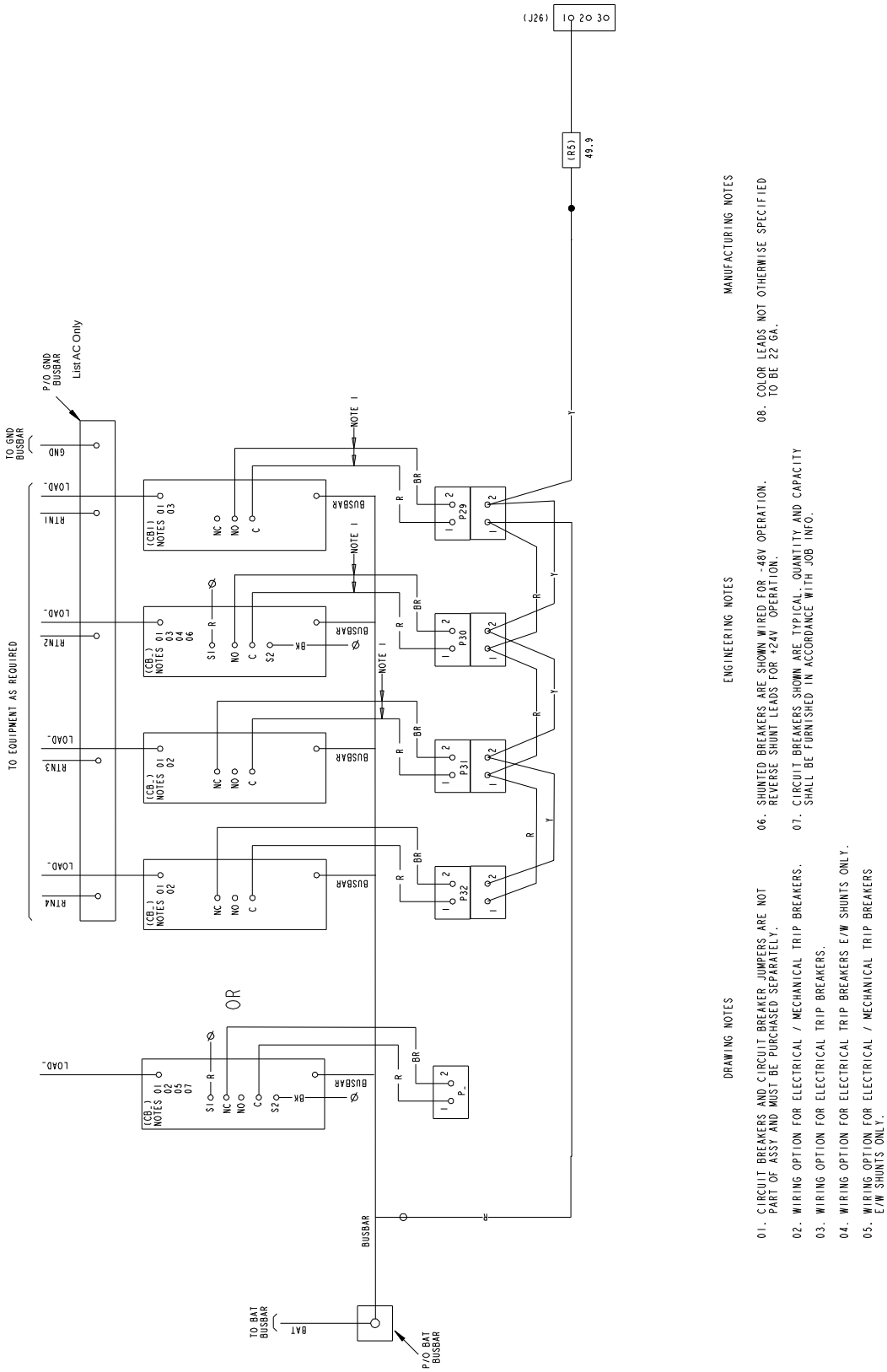

Figure 4-7
GJ/218 Circuit Breaker Wiring Diagram (List AC and AD)

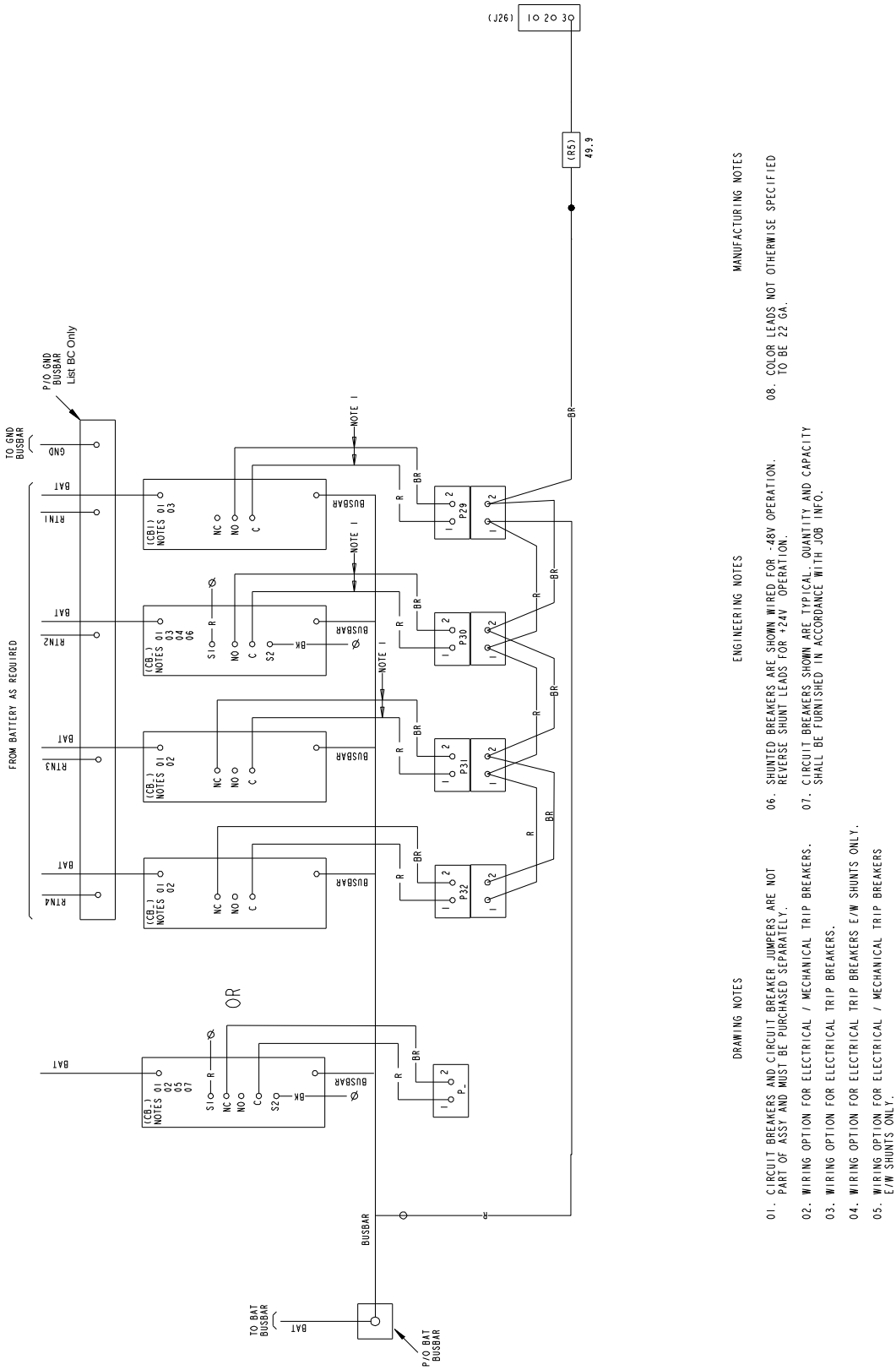

Figure 4-8
GJ/218 Circuit Breaker Wiring Diagram (List BC and BD)

Circuit Card Replacement Procedures

Warning: Circuit cards used in this power system contain static-sensitive devices. Read the Static Warning at the front of this document before performing any of the following procedures.

General

The following circuit card replacement procedures can be performed with the system operating.

Refer to Figure 2-1 for circuit card locations.

Caution: When performing any step in these procedures that requires removal or installation of hardware, use caution to ensure no hardware is dropped and left inside the cabinet; otherwise service interruption or equipment damage may occur.

Note: *When performing any step in these procedures that requires removal of existing hardware, retain all hardware for use in subsequent steps.*

System Interface Circuit Card Replacement

Procedure

1) Performing this procedure may activate external alarms. Do one of the following. If possible, disable these alarms. If these alarms cannot be easily disabled, notify the appropriate personnel to disregard any future alarms associated with this system while the procedure is being performed.

Danger: Performing the next steps exposes service personnel to battery potential. Exercise extreme caution not to inadvertently contact or have any tool inadvertently contact any energized electrical termination.

2) Open the distribution cabinet's front door by turning the latch in the counterclockwise position.

Warning: Damage to the circuit card may result if the next step is not followed.

3) Connect an approved grounding strap to your wrist. Attach the other end to a suitable ground.

4) Remove the top and front panels to access the circuit cards at the bottom of the distribution cabinet.

5) Carefully label any wires connected to the customer connection terminal block on the circuit card. These wires must be connected to the same terminals on the replacement circuit card. Refer to Figure 4-9.

6) Carefully label the connectors plugged into the circuit card. These connectors must be plugged into the same connectors on the replacement circuit card. Refer to Figure 4-9.

Danger: In the next step, external wiring may be energized from an external source. DO NOT allow bare wire ends to contact any grounded or energized object.

7) Remove the external wiring from the customer connection terminal block. DO NOT allow the bare wire end to contact any grounded or energized object. Isolate the wire end with electrical tape. Repeat for each wire to be removed.

8) Unplug all connectors plugged into the circuit card.

9) Remove the screws securing the circuit card and remove the circuit card from the distribution cabinet.

10) In this step, ensure you do not intermix the old and replacement circuit cards. Set the shorting jumpers on the replacement circuit card to match the locations on the old circuit card. Jumper settings are documented in CHAPTER 3. SETTING JUMPERS AND SWITCH OPTIONS of the Power System Installation Instructions (IM582127000).

11) Slide the replacement circuit card into the mounting position inside the distribution cabinet, and secure with the screws removed from the old circuit card.

12) Plug all connectors removed from the old circuit card into the same position on the replacement circuit card.

Danger: In the next step, external alarm wiring may be energized from an external source. DO NOT allow bare wire ends to contact any grounded or energized object.

13) Reconnect the external wiring to the correct terminals on the customer connection terminal block. First remove the electrical tape that was applied to the bare wire end in a previous step. DO NOT allow the bare wire end to contact any grounded or energized object. After securing the wire, gently tug on the wire to ensure that it cannot be pulled out of the terminal block. Repeat for each wire to be reconnected.

14) Remove the grounding wrist strap.

15) Reinstall the top and front panels that cover the circuit cards at the bottom of the distribution cabinet.

16) Close the distribution cabinet's front door. Turn the latch clockwise to secure the door.

17) Enable the external alarms, or notify appropriate personnel that this procedure is finished.

18) Ensure that there are no local or remote alarms active on the system.

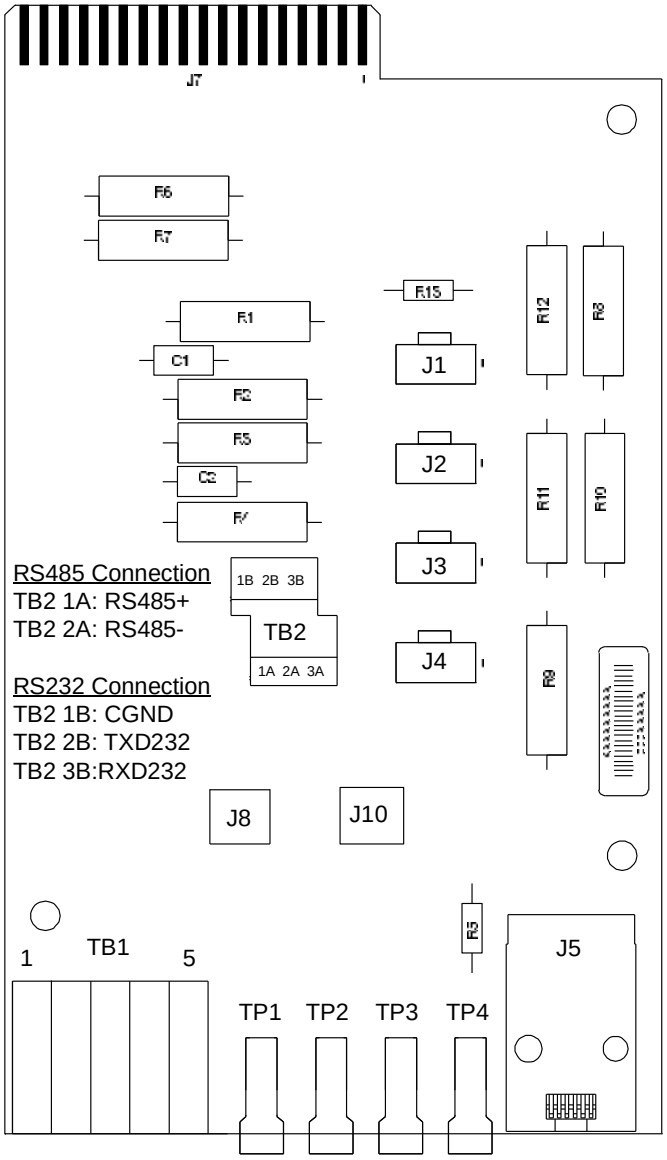

J1, J2, J3, J4
Distribution Panels FA Inputs

J8 (Main Bay Only)
Selects to power Controller from “Battery Power” or not.

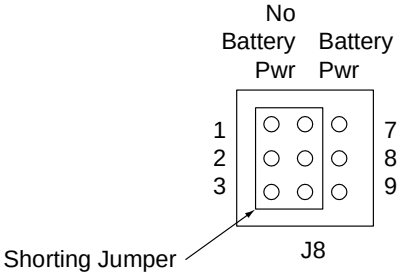

J10 (Main Bay Only)
Battery Monitoring External / Internal (see TB1-4 and TB1-5 for external monitoring points)

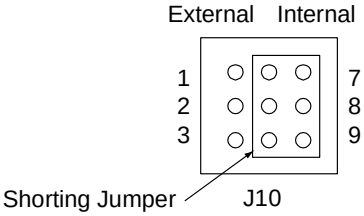

J5
CAN

TB1-1: Battery Tray FA
TB1-2: External Battery FA
TB1-3: External System FA
TB1-4: External Battery Monitoring (-)
TB1-5: External Battery Monitoring (+)

TP1 (+) and TP2 (-)
Bay Voltage Monitoring

TP3 (+) and TP4 (-)
Bay Load Shunt Monitoring

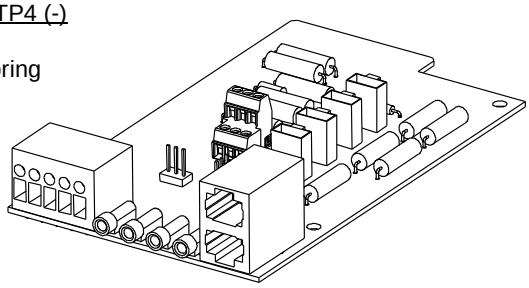

TB1
TB1-2, TB1-3, TB1-4, TB1-5 Main Bay Only.
Wire Size Capacity: 22-12 AWG.
Recommended Torque: 3.0 in-lbs.
FA Signals: Battery applied to the terminal turns in an alarm.

Figure 4-9
System Interface Circuit Card Connector Locations

SM-DU Circuit Card Replacement (Supplemental Bays Only)

Procedure

1) Performing this procedure may activate external alarms. Do one of the following. If possible, disable these alarms. If these alarms cannot be easily disabled, notify the appropriate personnel to disregard any future alarms associated with this system while the procedure is being performed.

Danger: Performing the next steps exposes service personnel to battery potential. Exercise extreme caution not to inadvertently contact or have any tool inadvertently contact any energized electrical termination.

2) Open the distribution cabinet's front door by turning the latch in the counterclockwise position.

Warning: Damage to the circuit card may result if the next step is not followed.

3) Connect an approved grounding strap to your wrist. Attach the other end to a suitable ground.
4) Remove the top and front panels to access the circuit cards at the bottom of the distribution cabinet. See Figure 4-10.
5) Remove connectors J1, J2, and J3 from the circuit card.
6) Remove the screws securing the circuit card and remove the circuit card from the distribution cabinet.
7) In this step, ensure you do not intermix the old and replacement circuit cards. Set the switches on the replacement circuit card to the same setting as the old circuit card. Switch settings are documented in CHAPTER 3. SETTING JUMPERS AND SWITCH OPTIONS of the Power System Installation Instructions (IM582127000).
8) Slide the replacement circuit card into the mounting position inside the distribution cabinet, and secure with the screws removed from the old circuit card.
9) Plug connectors J1, J2, and J3 into the circuit card.
10) Reinstall the top and front panels that cover the circuit cards at the bottom of the distribution cabinet.
11) Remove the grounding wrist strap.
12) Close the distribution cabinet's front door. Turn the latch clockwise to secure the door.
13) Temporarily remove then re-insert the ACU+. Wait for the ACU+ to initialize.
14) Enable the external alarms, or notify appropriate personnel that this procedure is finished.
15) Ensure that there are no local or remote alarms active on the system.

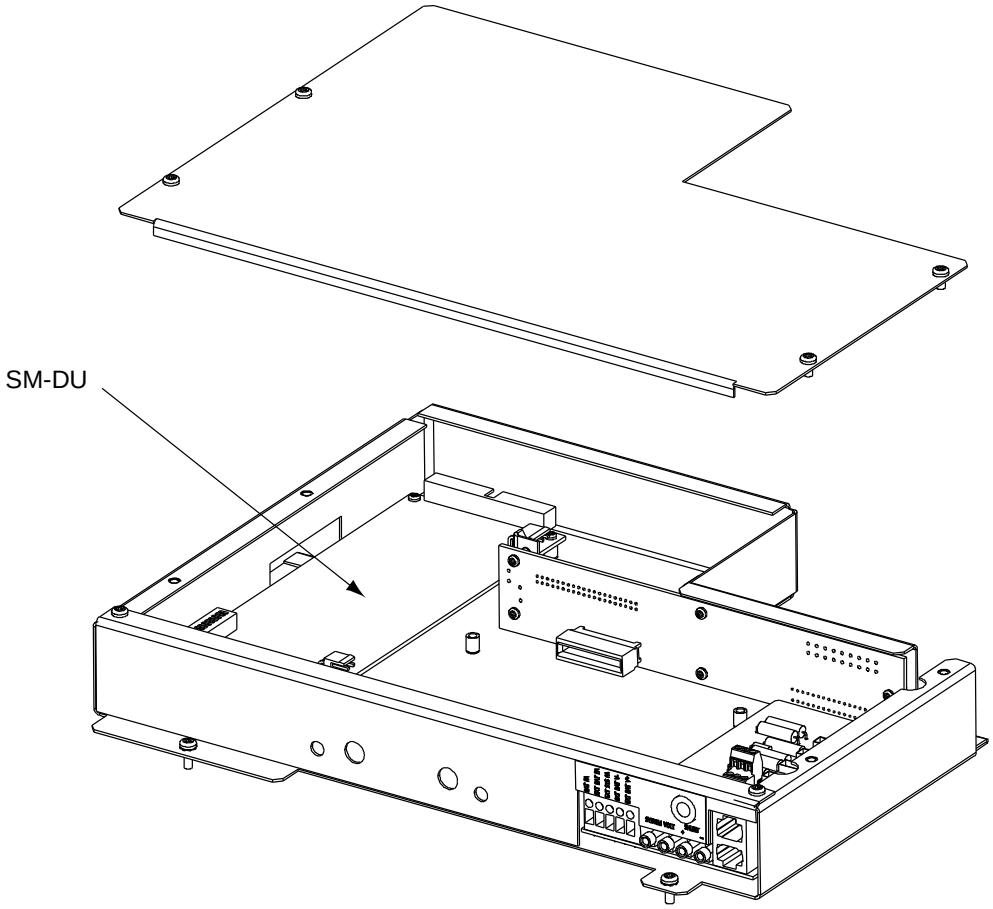

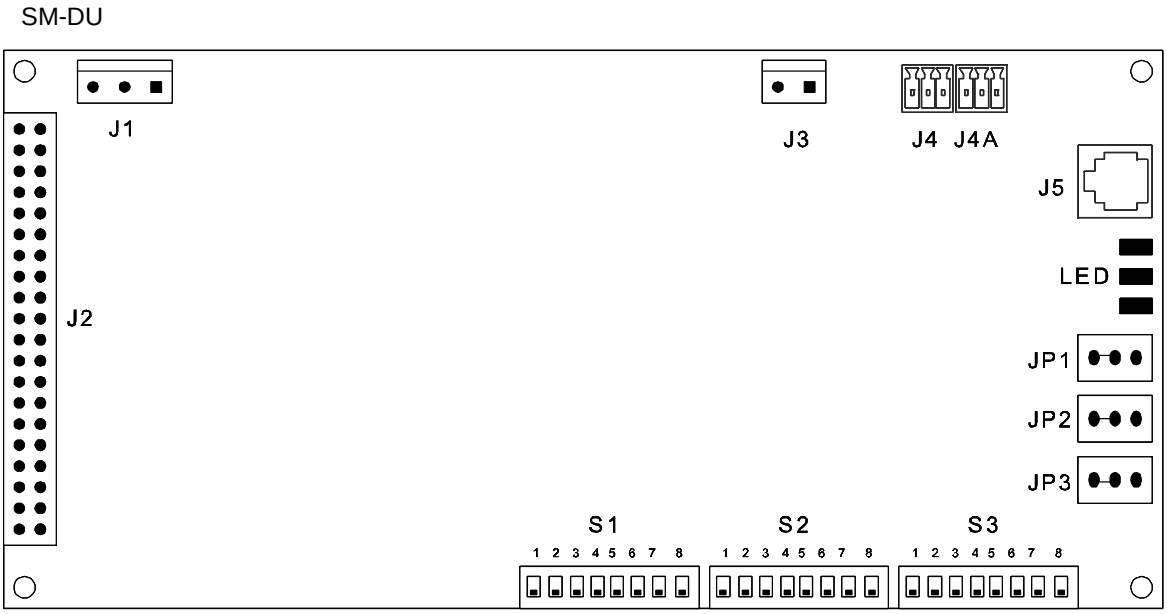

Figure 4-10
SM-DU Circuit Card Replacement (Supplemental Bays Only)

IB2 (ACU+ Interface Board) and Optional EIB (ACU+ Extended Interface Board) Replacement (Main Bay Only)

Procedure

1) Performing this procedure may activate external alarms. Do one of the following. If possible, disable these alarms. If these alarms cannot be easily disabled, notify the appropriate personnel to disregard any future alarms associated with this system while the procedure is being performed.

Danger: Performing the next steps exposes service personnel to battery potential. Exercise extreme caution not to inadvertently contact or have any tool inadvertently contact any energized electrical termination.

2) Open the distribution cabinet's front door by turning the latch in the counterclockwise position.

Warning: Damage to the circuit card may result if the next step is not followed.

3) Connect an approved grounding strap to your wrist. Attach the other end to a suitable ground.

4) Carefully label the wires connected to the customer connection terminal blocks on the circuit card. These wires must be connected to the same terminals on the replacement circuit card. Refer to Figure 4-11 or Figure 4-12.

5) Carefully label the connectors plugged into the circuit card. These connectors must be plugged into the same connectors on the replacement circuit card. Refer to Figure 4-11 or Figure 4-12.

Danger: In the next step, external wiring may be energized from an external source. DO NOT allow bare wire ends to contact any grounded or energized object.

6) Remove the external wiring from the customer connection terminal blocks. DO NOT allow the bare wire end to contact any grounded or energized object. Isolate the wire end with electrical tape. Repeat for each wire to be removed.

7) Unplug all connectors plugged into the circuit card.

8) Remove the circuit card by removing the bracket the circuit card is mounted to. Remove the circuit card from the bracket.

9) In this step, ensure you do not intermix the old and replacement circuit cards. Set the switch on the replacement circuit card to the same setting as the old circuit card. Switch settings are documented in CHAPTER 3. SETTING JUMPERS AND SWITCH OPTIONS of the Power System Installation Instructions (IM582127000).

10) Secure the replacement circuit card to the bracket, and re-install the circuit card and bracket into the distribution cabinet.

11) Plug all connectors removed from the old circuit card into the same position on the replacement circuit card.

Danger: In the next step, external alarm wiring may be energized from an external source. DO NOT allow bare wire ends to contact any grounded or energized object.

12) Reconnect the external wiring to the correct terminals on the customer connection terminal block. First remove the electrical tape that was applied to the bare wire end in a previous step. DO NOT allow the bare wire end to contact any grounded or energized object. After securing the wire, gently tug on the wire

to ensure that it cannot be pulled out of the terminal block. Repeat for each wire to be reconnected.

13) Remove the grounding wrist strap.

14) Close the distribution cabinet's front door. Turn the latch clockwise to secure the door.

15) Enable the external alarms, or notify appropriate personnel that this procedure is finished.

16) Ensure that there are no local or remote alarms active on the system.

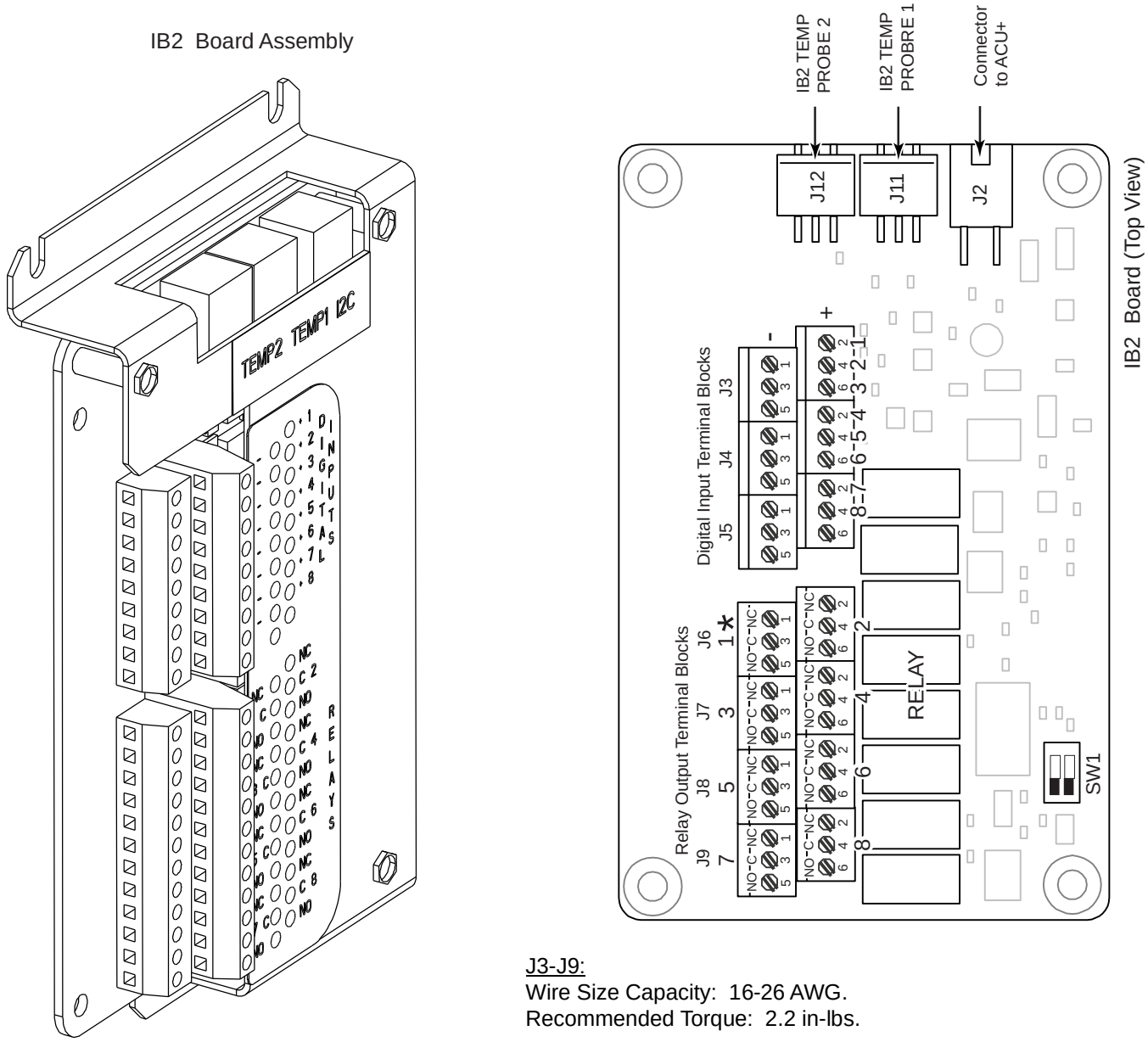

J3-J9:
Wire Size Capacity: 16-26 AWG.
Recommended Torque: 2.2 in-lbs.

Figure 4-11
IB2 (ACU+ Interface Board) Connector Locations

Optional EIB Interface Board Assembly

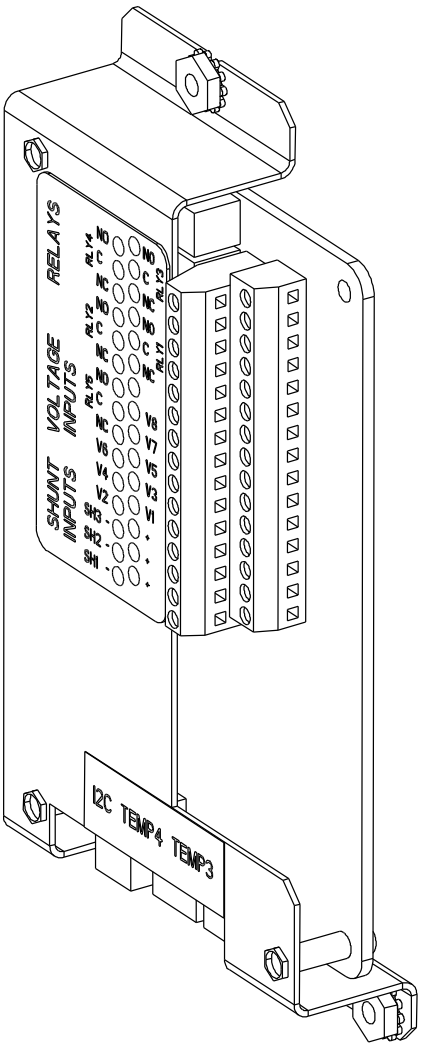

Optional EIB Interface Board
(Top View)

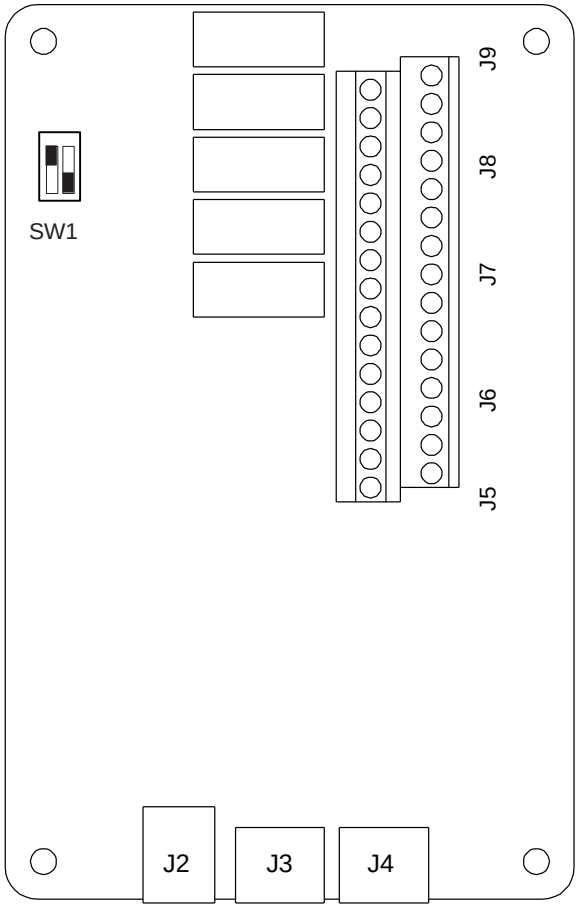

J5-J9
Wire Size Capacity: 16-26 AWG.
Recommended Torque: 2.2 in-lbs.

Figure 4-12
EIB (ACU+ Extended Interface Board) Connector Locations

SM-DU+ and Shunt Interface Assembly Replacement

Procedure

1) Performing this procedure may activate external alarms. Do one of the following. If possible, disable these alarms. If these alarms cannot be easily disabled, notify the appropriate personnel to disregard any future alarms associated with this system while the procedure is being performed.

Danger: Performing the next steps exposes service personnel to battery potential. Exercise extreme caution not to inadvertently contact or have any tool inadvertently contact any energized electrical termination.

2) Open the distribution cabinet's front door by turning the latch in the counterclockwise position.

Warning: Damage to the circuit card may result if the next step is not followed.

3) Connect an approved grounding strap to your wrist. Attach the other end to a suitable ground.

4) Carefully label the wires connected to the shunt input terminal blocks on circuit card. These wires must be connected to the same terminals on the replacement circuit card. Refer to Figure 4-13.

5) Carefully label the connectors plugged into the circuit card. These connectors must be plugged into the same connectors on the replacement circuit card. Refer to Figure 4-13.

Danger: In the next step, external wiring may be energized from an external source. DO NOT allow bare wire ends to contact any grounded or energized object.

6) Remove the external wiring from the shunt input terminal blocks. DO NOT allow the bare wire end to contact any grounded or energized object. Isolate the wire end with electrical tape. Repeat for each wire to be removed.

7) Unplug all connectors plugged into the circuit card.

8) Remove the screw securing the SM-DU+ and Shunt Interface Assembly to the bottom of the distribution cabinet, and remove the assembly.

9) **SM-DU+:** In this step, ensure you do not intermix the old and replacement circuit cards. Set the switches on the replacement circuit card to the same settings as the old circuit card. Switch settings are documented in CHAPTER 3. SETTING JUMPERS AND SWITCH OPTIONS of the Power System Installation Instructions (IM582127000).

10) Slide the replacement SM-DU+ and Shunt Interface Assembly into the mounting position inside the distribution cabinet, and secure with the screw removed from the old assembly.

11) Plug all connectors removed from the old circuit card into the same position on the replacement circuit card.

Danger: In the next step, external alarm wiring may be energized from an external source. DO NOT allow bare wire ends to contact any grounded or energized object.

12) Reconnect the external wiring to the correct terminals on the shunt input terminal blocks. First remove the electrical tape that was applied to the bare wire end in a previous step. DO NOT allow the bare wire end to contact any grounded or energized object. After securing the wire, gently tug on the wire to ensure that it

cannot be pulled out of the terminal block. Repeat for each wire to be reconnected.

13) Remove the grounding wrist strap.
14) Close the distribution cabinet's front door. Turn the latch clockwise to secure the door.
15) Enable the external alarms, or notify appropriate personnel that this procedure is finished.
16) Ensure that there are no local or remote alarms active on the system.

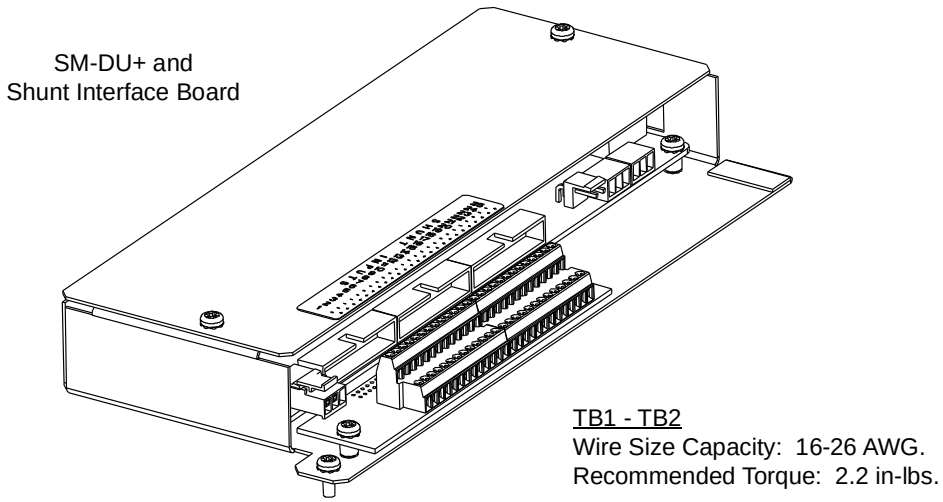

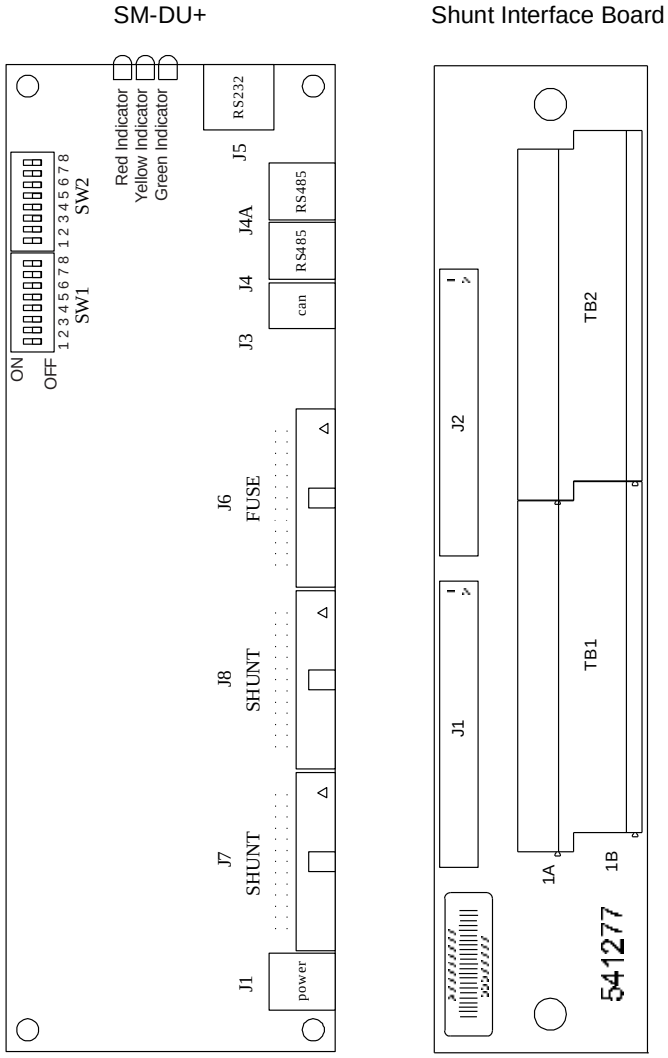

Figure 4-13
SM-DU+ and Shunt Interface Assembly Connector Locations

Optional LVD Driver and LVD Driver Lite Circuit Card Replacement

Procedure

1) Performing this procedure may activate external alarms. Do one of the following. If possible, disable these alarms. If these alarms cannot be easily disabled, notify the appropriate personnel to disregard any future alarms associated with this system while the procedure is being performed.

Danger: Performing the next steps exposes service personnel to battery potential. Exercise extreme caution not to inadvertently contact or have any tool inadvertently contact any energized electrical termination.

2) Open the distribution cabinet's front door by turning the latch in the counterclockwise position.

Warning: Damage to the circuit card may result if the next step is not followed.

3) Connect an approved grounding strap to your wrist. Attach the other end to a suitable ground.
4) If any of the low voltage disconnect contactors is open and it is desired to be closed, push the LVD Inhibit Switch located on the circuit card installed in the main bay to the UP position momentarily and then leave the switch in the middle (OFF) position.
5) Remove the top and front panels to access the circuit cards at the bottom of the distribution cabinet.
6) Carefully label the connectors plugged into the circuit card. These connectors must be plugged into the same connectors on the replacement circuit card. Refer to Figure 4-14 or Figure 4-15.
7) Unplug all connectors plugged into the circuit card.
8) Remove the screws securing the circuit card and remove the circuit card from the distribution cabinet.
9) Slide the replacement circuit card into the mounting position inside the distribution cabinet, and secure with the screws removed from the old circuit card.
10) Ensure that the LVD Inhibit Switch is in the middle (OFF) position.
11) Plug all connectors removed from the old circuit card into the same position on the replacement circuit card.
12) Push the LVD Inhibit Switch to the down (ON) position.
13) Remove the grounding wrist strap.
14) Reinstall the top and front panels that cover the circuit cards at the bottom of the distribution cabinet.
15) Close the distribution cabinet's front door. Turn the latch clockwise to secure the door.
16) Enable the external alarms, or notify appropriate personnel that this procedure is finished.
17) Ensure that there are no local or remote alarms active on the system.

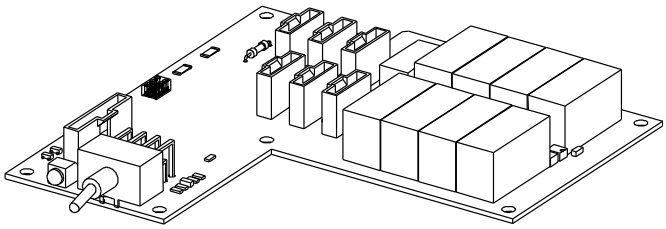

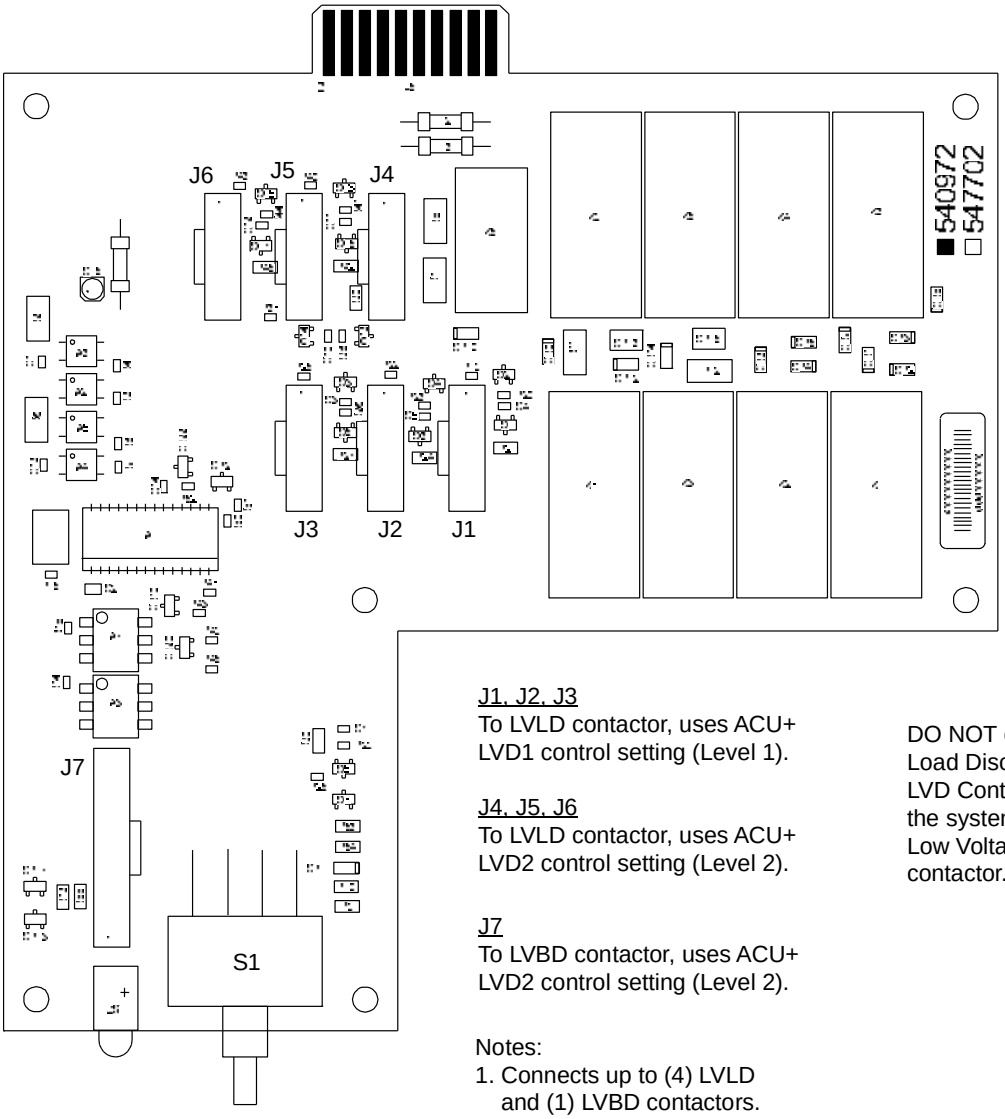

J1, J2, J3
To LVLD contactor, uses ACU+ LVD1 control setting (Level 1).

J4, J5, J6
To LVLD contactor, uses ACU+ LVD2 control setting (Level 2).

J7
To LVBD contactor, uses ACU+ LVD2 control setting (Level 2).

DO NOT change a Low Voltage Load Disconnect contactor to LVD Control Level 2 (LVD2) if the system is furnished with a Low Voltage Battery Disconnect contactor.

Notes:
1. Connects up to (4) LVLD and (1) LVBD contactors.
2. Switch and indicator located on circuit card installed in Main Bay only.

Figure 4-14
Optional LVD Driver Circuit Card Connector Locations

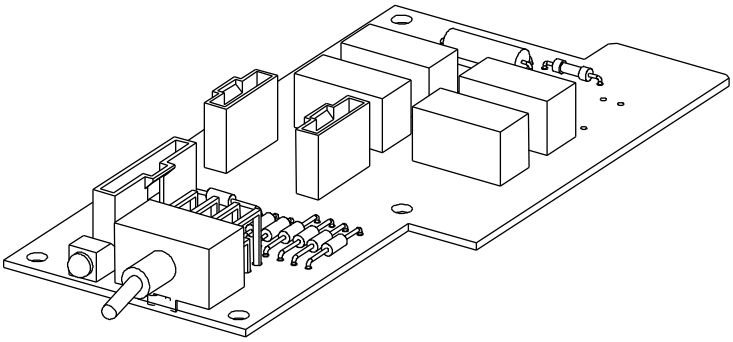

DO NOT change a Low Voltage Load Disconnect contactor to LVD Control Level 2 (LVD2) if the system is furnished with a Low Voltage Battery Disconnect contactor.

<u>J1</u>
To LVLD contactor, uses ACU+ LVD1 control setting (Level 1).

<u>J3</u>
To LVLD contactor, uses ACU+ LVD2 control setting (Level 2).

<u>J2</u>
To LVBD contactor, uses ACU+ LVD2 control setting (Level 2). Can only be used if it is contained in a List 21 (1-row) cabinet.

Notes:
1. Connects up to (2) LVD contactors rated at 600A or less.
2. Only one (1) contactor per level can be accommodated. J2 and J3 are on Level 2, only one (1) of these connectors can be used at a time.
3. Switch and indicator located on circuit card installed in Main Bay only.

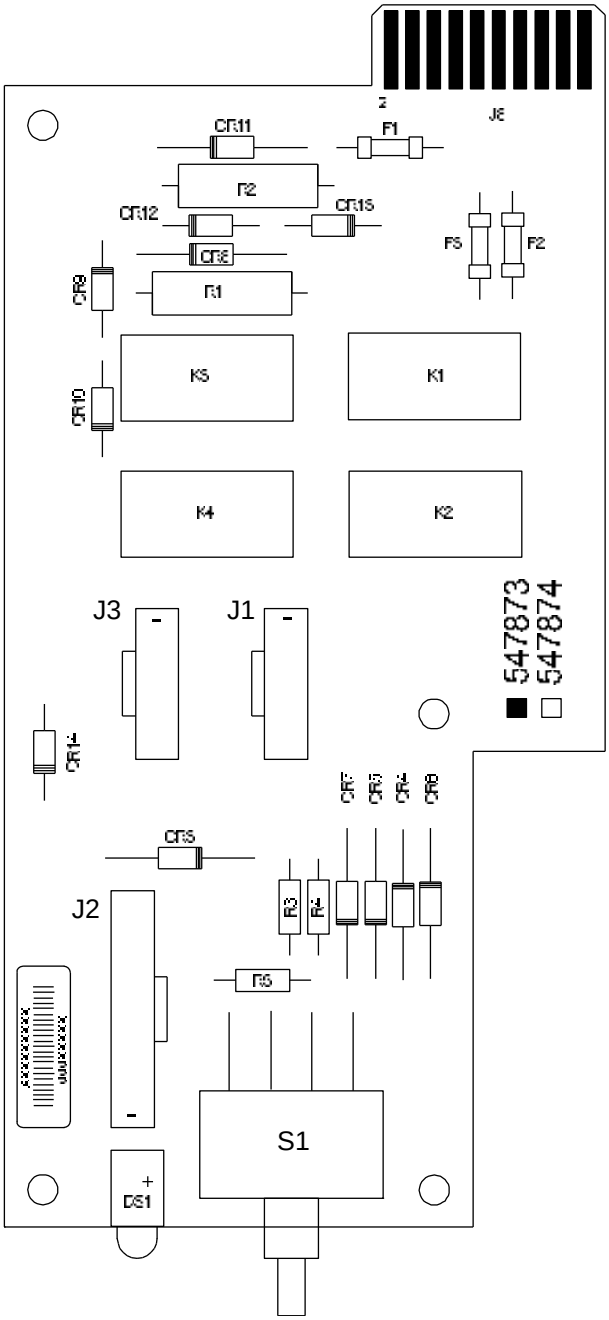

Figure 4-15
Optional LVD Driver Lite Circuit Card Connector Locations

Optional Manual Battery Disconnect Circuit Card Replacement

Procedure

1) Performing this procedure may activate external alarms. Do one of the following. If possible, disable these alarms. If these alarms cannot be easily disabled, notify the appropriate personnel to disregard any future alarms associated with this system while the procedure is being performed.

Danger: Performing the next steps exposes service personnel to battery potential. Exercise extreme caution not to inadvertently contact or have any tool inadvertently contact any energized electrical termination.

2) Open the distribution cabinet's front door by turning the latch in the counterclockwise position.

Warning: Damage to the circuit card may result if the next step is not followed.

3) Connect an approved grounding strap to your wrist. Attach the other end to a suitable ground.
4) Remove the top and front panels to access the circuit cards at the bottom of the distribution cabinet.
5) Carefully label the connectors plugged into the circuit card. These connectors must be plugged into the same connectors on the replacement circuit card. Refer to Figure 4-16.
6) Unplug all connectors plugged into the circuit card.
7) Remove the screws securing the circuit card and remove the circuit card from the distribution cabinet.
8) Place the replacement circuit card into the mounting position inside the distribution cabinet, and secure with the screws removed from the old circuit card.
9) Plug all connectors removed from the old circuit card into the same position on the replacement circuit card.
10) Remove the grounding wrist strap.
11) Reinstall the top and front panels that cover the circuit cards at the bottom of the distribution cabinet.
12) Close the distribution cabinet's front door. Turn the latch clockwise to secure the door.
13) Enable the external alarms, or notify appropriate personnel that this procedure is finished.
14) Ensure that there are no local or remote alarms active on the system.

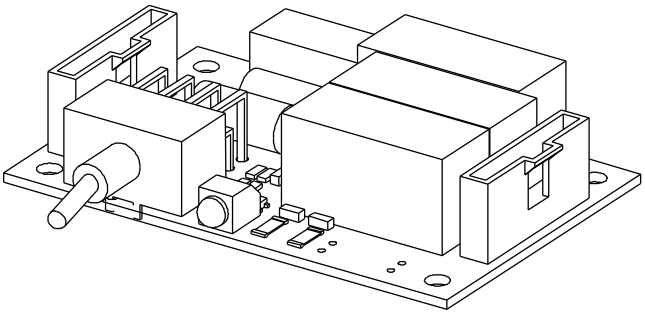

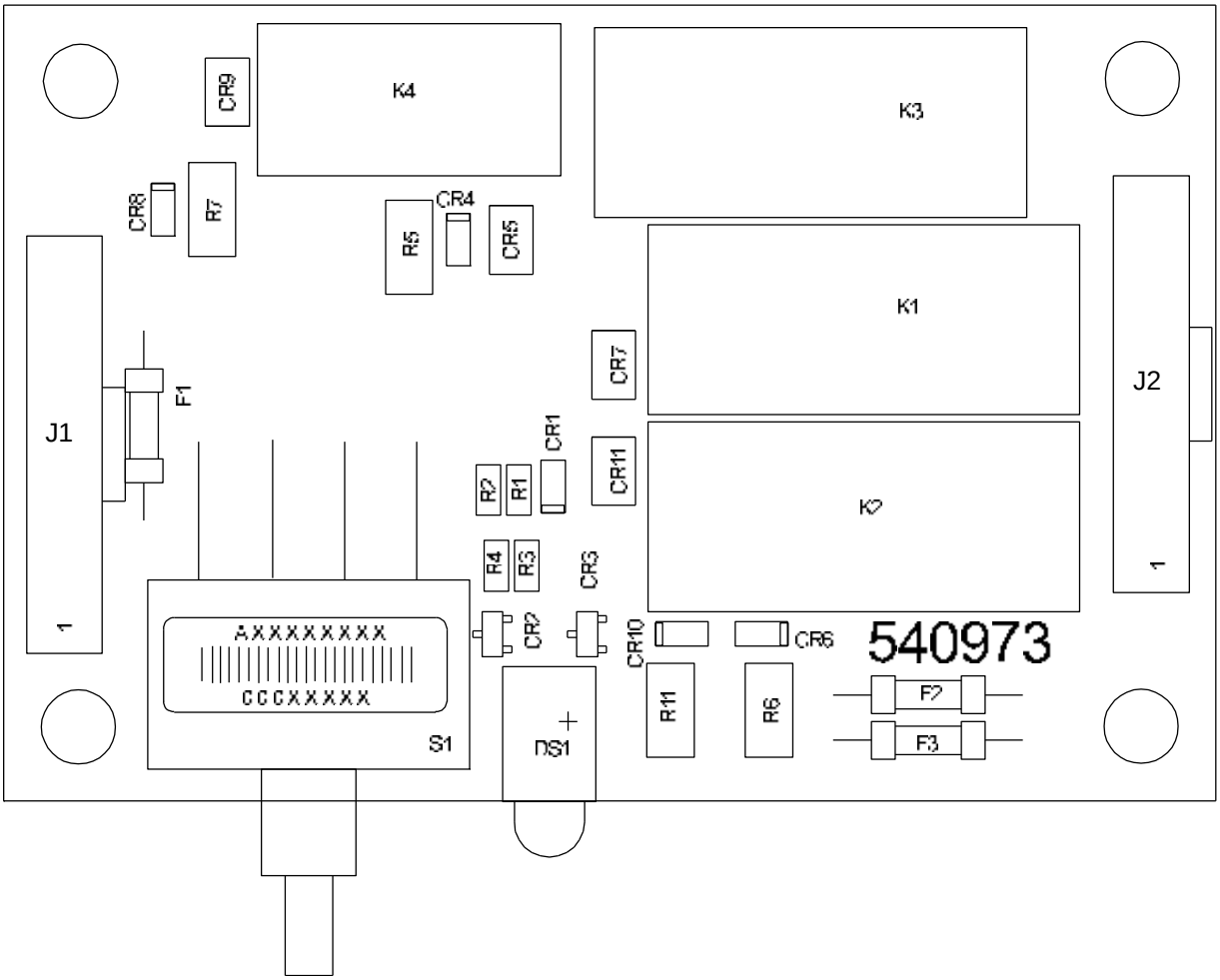

Figure 4-16
Optional Manual Battery Disconnect Circuit Card Connector Locations

Replacing a Distribution Panel

Danger: ***Performing this procedure exposes service personnel to battery potential. Exercise extreme caution not to inadvertently contact or have any tool inadvertently contact any energized electrical termination.***

Procedure

Note: *Refer to Figure 4-17 as this procedure is performed.*

Removing the Distribution Panel

1) Open the distribution cabinet's front door by turning the latch in the counterclockwise position.
2) Remove the plastic shield covering the circuit breakers or fuseholders on the panel to be removed by loosening the screws holding the shield and sliding the shield upwards.
3) Disconnect all load or battery wiring from the circuit breaker or fuse positions.
4) On panels equipped with a ground busbar, remove all load return or battery return wiring from the ground busbar.
5) On panels equipped with shunts, label the shunt leads then remove them from the panel.
6) Locate the in-line FA/CBA connector located near the back of the panel, and separate the connector halves.
7) Refer to Figure 4-17 and remove the hardware securing the panel's Ground Busbar (if equipped) to the distribution cabinet's busbar.
8) **For load distribution panels,** refer to Figure 4-17 and remove the hardware securing the panel's System Load Distribution busbar to the distribution cabinet's busbar.
9) **For battery distribution panels,** refer to Figure 4-17 and remove the hardware securing the panel's Battery Busbar to the distribution cabinet's busbar.
10) **For dual voltage load distribution panels,** refer to Figure 4-17 and remove the hardware securing the +24V jumper leads.
11) Refer to Figure 4-17 and remove the hardware securing the distribution panel to the distribution cabinet. Remove the panel from the distribution cabinet.

Installing the Distribution Panel

Note: *In the following procedure, before making busbar-to-busbar connections, apply a thin coating of electrical anti-oxidizing compound to the mating surfaces of the busbars.*

1) Orient the replacement distribution panel into distribution cabinet, checking to ensure no wires are pinched. Replace the hardware securing the distribution panel to the distribution cabinet (10-32 x 5/8" bolt, #10 flat washer, 4-places).
2) **For dual voltage load distribution panels,** replace the hardware securing the +24V jumper leads (1/4-20 bolt, 1/4" lock washer, 1/4" flat washer. Torque to 84 in-lbs).
3) **For battery distribution panels,** replace the hardware securing the panel's Battery Busbar to the distribution cabinet's busbar (3/8-16 x 1-1/4" bolt, 3/8" Belleville lock washer, 3/8" hardened flat washer, 2-places. Torque to 180 in-lbs.)
4) **For load distribution panels,** replace the hardware securing the panel's System Load Distribution busbar to the distribution cabinet's busbar (1/4-20 x 1" bolt, 1/4" Belleville lock washer, 1/4" Belleville lock washer (concave side of Belleville lock washers face each other), 1/4" hardened flat washer, 2-places. Torque to 60 in-lbs).
5) Replace the hardware securing the panel's Ground Busbar (if equipped) to the distribution cabinet's busbar (1/4-20 x 1" bolt, 1/4" Belleville lock washer, 1/4" Belleville lock washer (concave side of Belleville lock washers face each other), 1/4" hardened flat washer, 2-places. Torque to 60 in-lbs).
6) Locate the in-line FA/CBA connector located near the back of the panel, and plug it into the mating connector half in the distribution cabinet.
7) On panels equipped with shunts, reconnect the shunt leads.

Warning: In the next step, observe correct polarity; otherwise equipment damage will result.

8) On panels equipped with a ground busbar, reconnect the load return or battery return wiring to the ground busbar.
9) Reconnect the load or battery wiring to the circuit breaker or fuse positions.
10) Transfer the plug-in circuit breakers or fuses from the old panel to the replacement panel.
11) Replace the plastic shield covering the circuit breakers or fuseholders on the replacement panel.
12) Verify no Circuit Breaker/Fuse Alarms are active.
13) Close the distribution cabinet's front door. Turn the latch clockwise to secure the door.

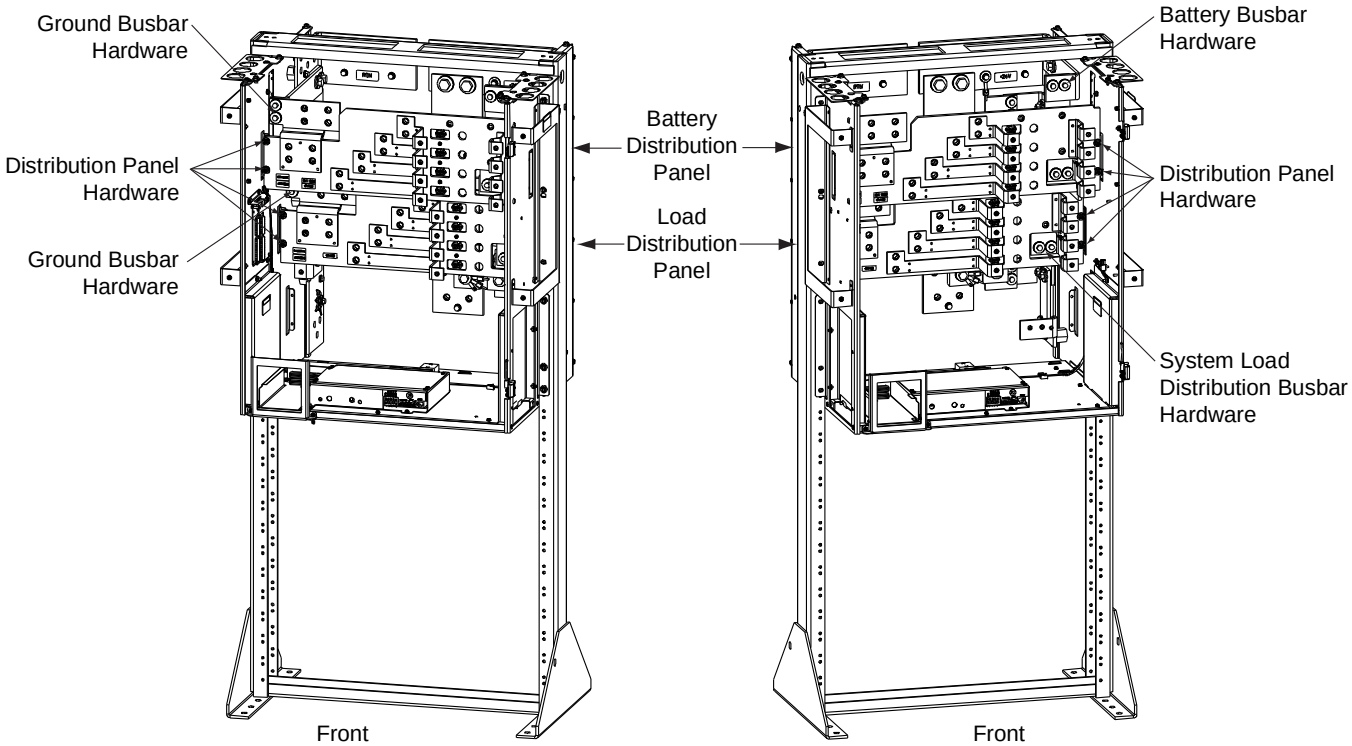

Components removed in illustration for clarity only.

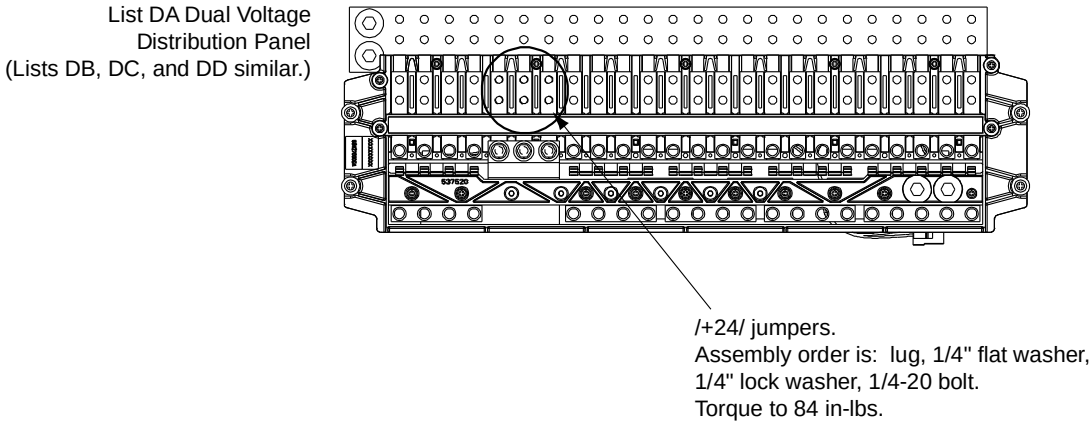

Figure 4-17
Replacing a Distribution Panel

Replacing a Battery or Load Disconnect Contactor

Danger: ***All sources of AC and DC power must be completely disconnected from this power system before performing this procedure. Use a voltmeter to verify no DC voltage is present on the system busbars before proceeding.***

Note: *In the following procedure, before making busbar-to-busbar connections, apply a thin coating of electrical anti-oxidizing compound to the mating surfaces of the busbars.*

Procedure

Note: *Refer to Figure 4-18, Figure 4-19, Figure 4-20, or Figure 4-21 as this procedure is performed.*

Removing the Contactor

1) Verify all AC and DC power sources are disconnected from the power system.
2) **For the 1-row distribution cabinet,** the contactor can be accessed from the top of the distribution cabinet. For the 2, 3, or 4-row distribution cabinet, the contactor can be accessed from the rear (and top) of the distribution cabinet.
3) **For the 2, 3, or 4-row distribution cabinet,** remove the distribution cabinet's rear access panel(s).
4) Disconnect the wiring to the contactor by unplugging the quick disconnects.
5) Note the orientation of the contactor to ensure the replacement is installed the same way. Unbolt the contactor (4-places) and remove. Save all hardware.

Installing the Replacement Contactor

1) Position the replacement contactor oriented the same way as the old.
2) Secure the contactor with the hardware removed above. Refer to Figure 4-18, Figure 4-19, Figure 4-20, or Figure 4-21 for hardware build-up and recommended torque.
3) Replace the wiring to the contactor by plugging-in the quick disconnects. Refer to Figure 4-18, Figure 4-19, Figure 4-20, or Figure 4-21.
4) For the 2, 3, or 4-row distribution cabinet, replace the distribution cabinet's rear access panel(s).

Restarting the Power System

1) Reconnect the AC and DC power sources to the power system.
2) Start the power system. Refer to the separate *Installation Instructions* (IM582127000) for a startup procedure.
3) Verify no alarms are active.

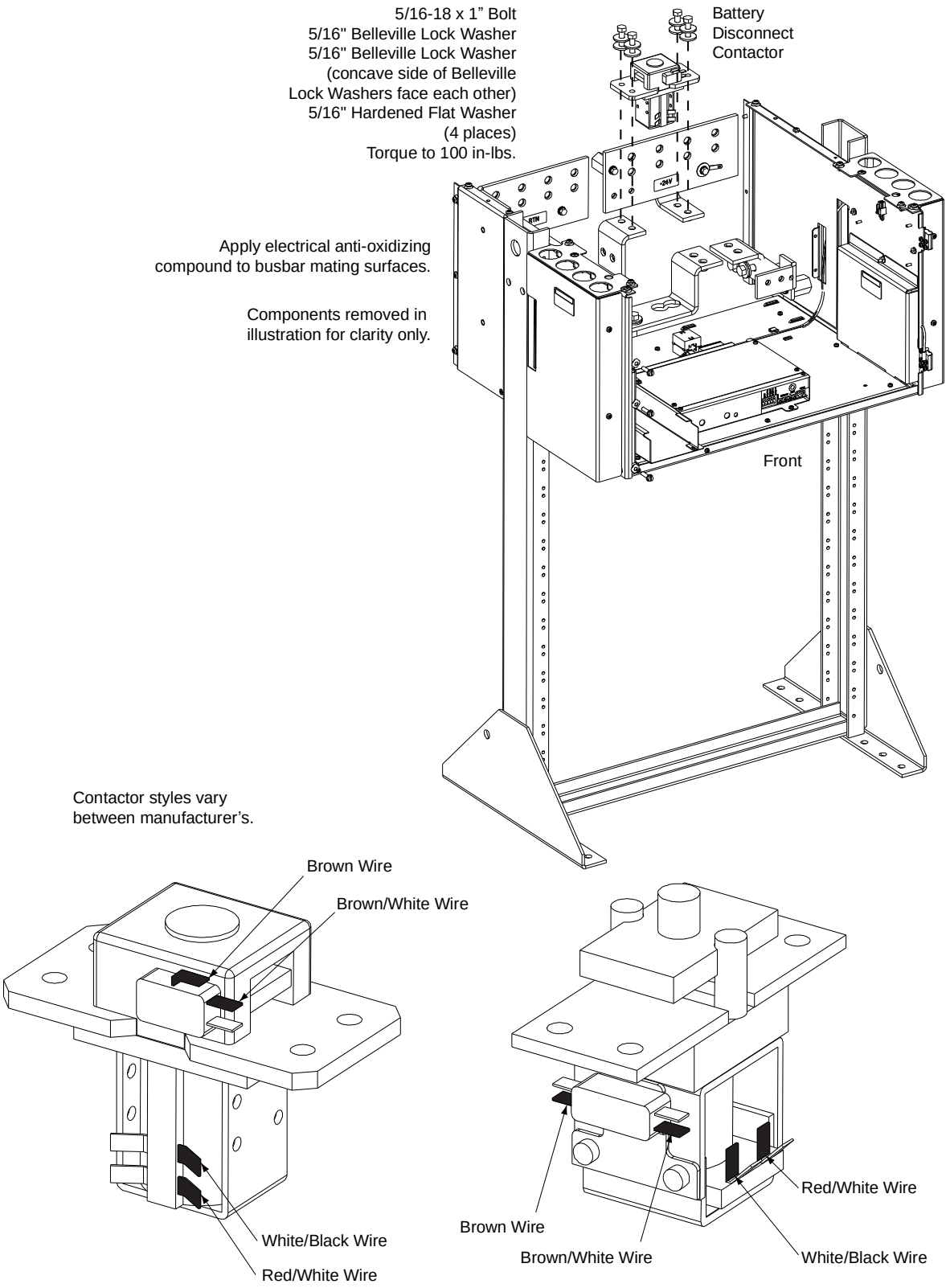

Figure 4-18
Replacing a Battery Disconnect Contactor
in a 1-Row Distribution Cabinet

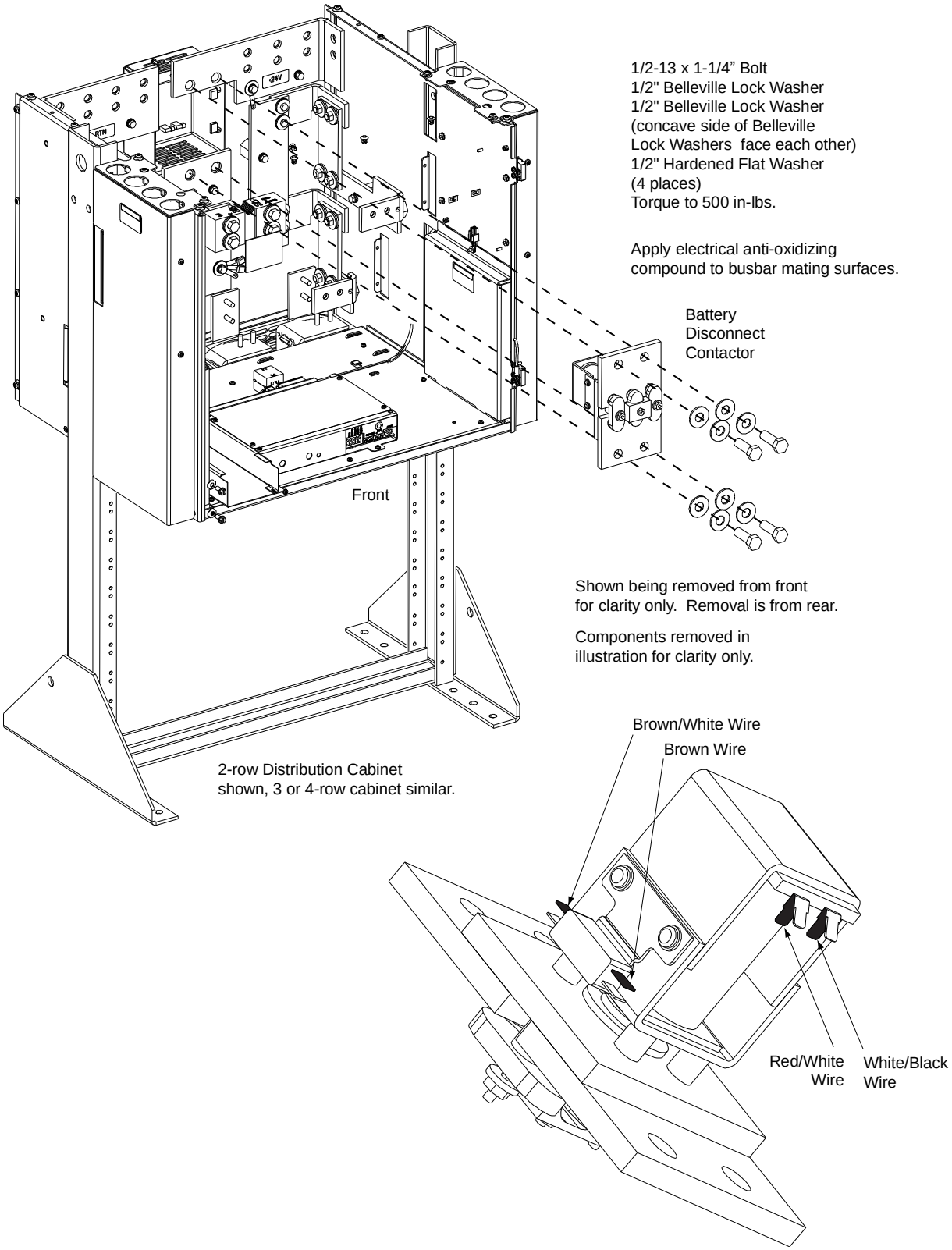

Figure 4-19
Replacing a Battery Disconnect Contactor
in a 2, 3, or 4-Row Distribution Cabinet

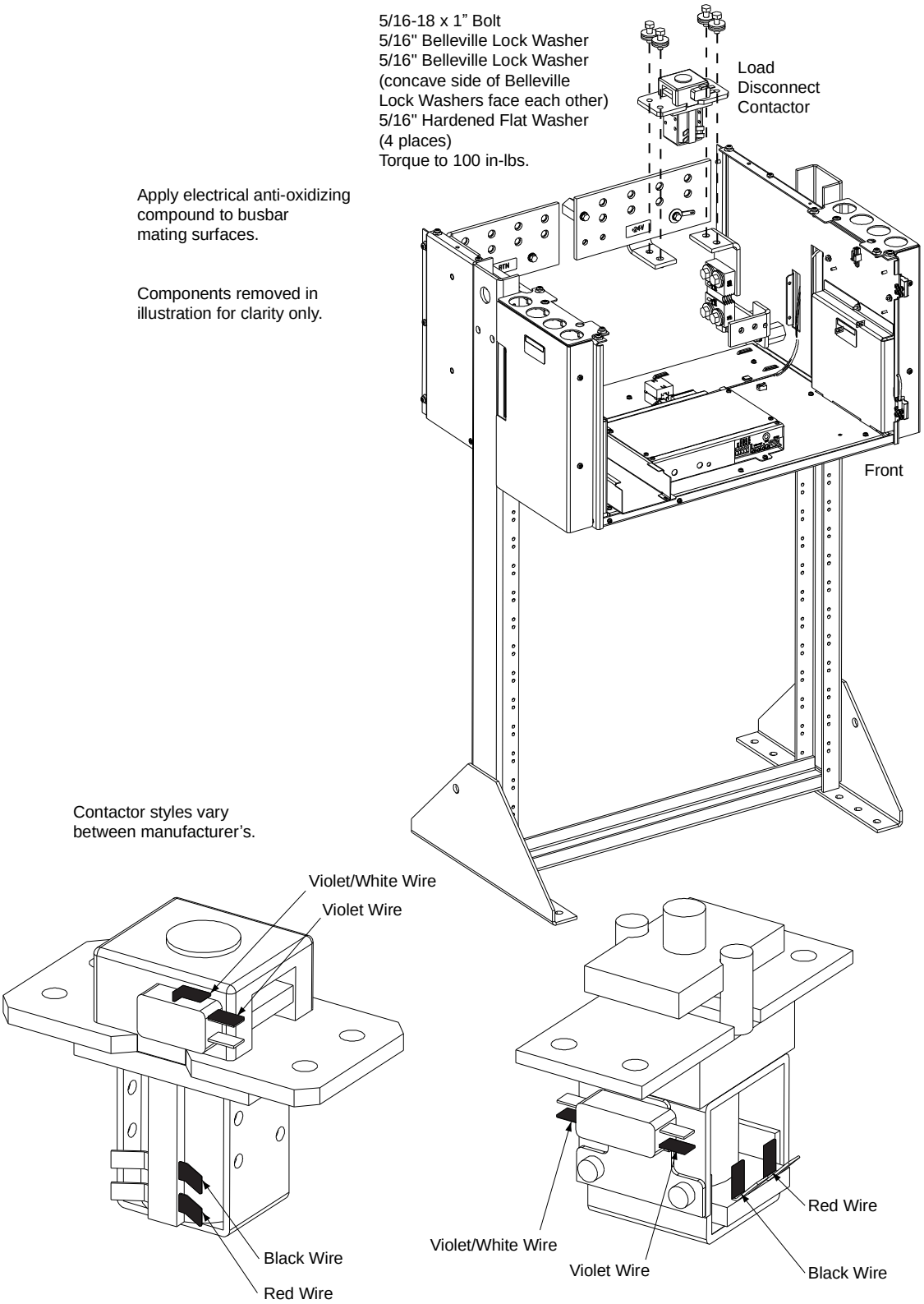

Figure 4-20
Replacing a Load Disconnect Contactor
in a 1-Row Distribution Cabinet

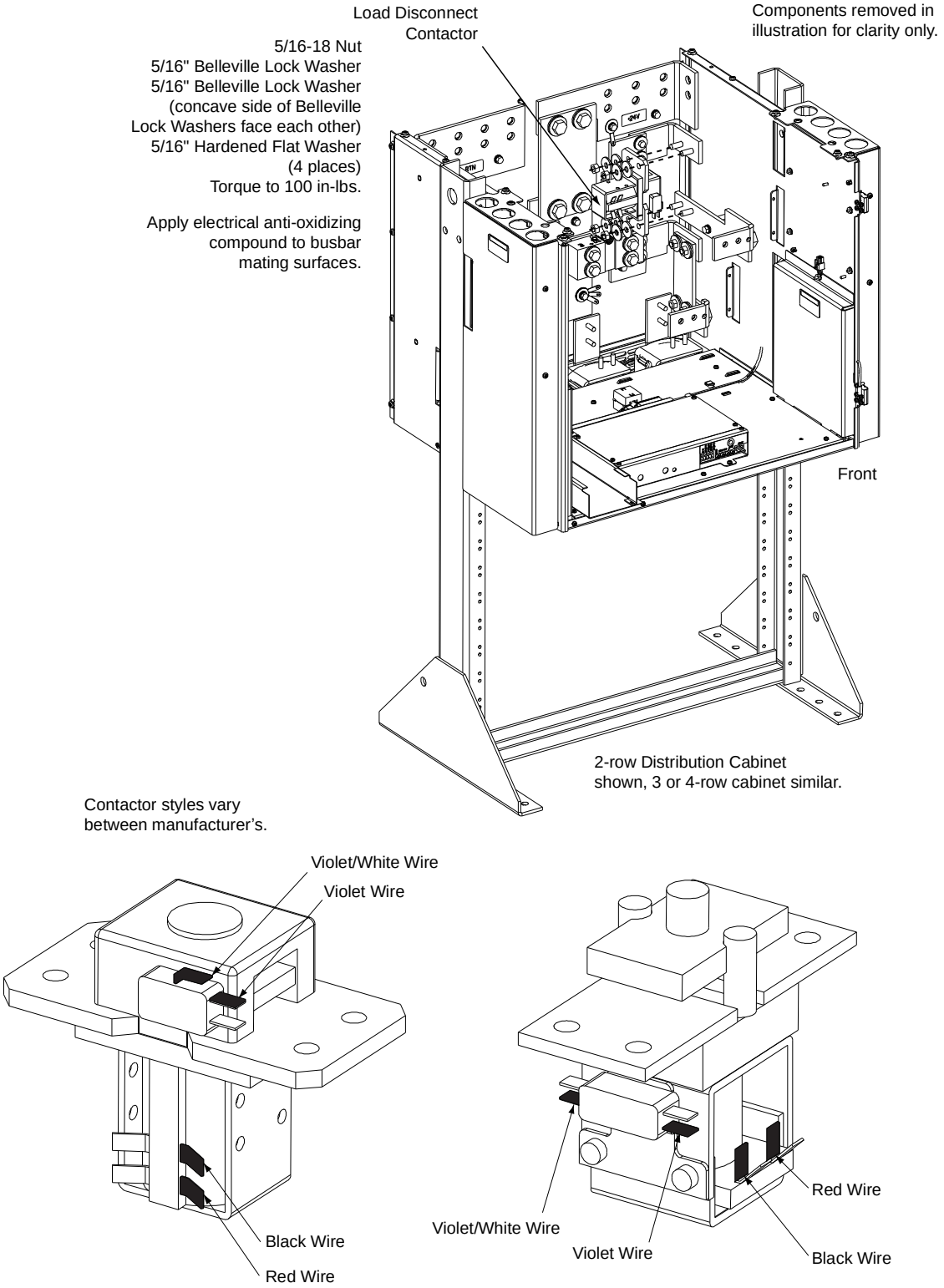

Figure 4-21
Replacing a Load Disconnect Contactor
in a 2, 3, or 4-Row Distribution Cabinet

This Page Left Intentionally Blank

REVISION RECORD

Issue	Change Number (ECO)	Description of Change
AA	LLP216539	New
AB	LLP217311	Battery Charge Current Limit Functionality added to Operating Procedures chapter.
AC	LLP218149	Adding 588705300, R48-2000e3, and C48/24-1500. Removing 588249700.

NetPerform™ Optimization Services

At Emerson Network Power, we understand the importance of reliable equipment – it's critical to both your business and your bottom line. That is why we offer a wide array of services to meet all of your network infrastructure needs.

Customer Service (Pre-Shipment)

Email	CustomerService.ESNA@Emerson.com	Pricing and availability [1,2], purchase orders, expediting requests and order tracking. Ask for your company's dedicated Customer Service Associate.
Phone	1.800.800.1280 option 2	

Customer Support Center (Post-Shipment)

Email	ESNACustomerSupportCenter@Emerson.com	After an order has shipped, contact our Customer Support Center with related questions, concerns or claims.
Phone	1.956.661.6867	

Account Management

Email	AccountManagement.ESNA@Emerson.com	Provides quotes and bid responses for custom configured [2] DC power systems and outside plant enclosures for customers and channel partners (Reps, VARs & Distributors).
Phone	1.800.800.1280 option 3	

Spare Parts

Email	DCpower.Spares@Emerson.com OSP.Spares@Emerson.com	Pricing and purchase orders for spare parts, including but not limited to breakers, cables, fuses, rectifier fans, misc. breaker and fuse panels, enclosure fans, doors and switches, etc.
Phone	1.800.800.1280 option 5	

DC Power Depot Repair

Email	DCpower.Repair@Emerson.com	Creates and processes RMAs for depot repair and refurbishment. Determines repair and refurbishment lead times and pricing based on warranties/contractual agreements. Provides repair shipping information and status.
Phone	1.800.800.1280 option 6	

Technical Support

Email	DCpower.TAC@Emerson.com OSP.TAC@Emerson.com	Answers technical product and system questions; determines status of warranties and contractual agreements for repair.
Phone	1.800.800.5260	

[1] Contact Account Management for custom-configurations.
[2] Contact DC Power Spare Parts for parts and accessories.

For More Information

To learn more about service offerings from Emerson Network Power, please contact your sales representative, call 1-800-800-1280 option 7, email ES.Services@Emerson.com or visit EmersonNetworkPower.com/EnergySystems.

EmersonNetworkPower.com/EnergySystems (North America)
EmersonNetworkPower.eu/EnergySystems (EMEA)